Revamped Unisaw leads new wave of tools, p. 22

TAUNTON'S

Fine WoodWorking

The right drawer for your project

8 great ways to hang cabinets

Best dust masks and respirators

Rx for sloppy dovetails

Better way to build boxes

Food-safe finishes

Dec. 2008 No. 201

$8.99

www.finewoodworking.com

READER SERVICE NO. 1

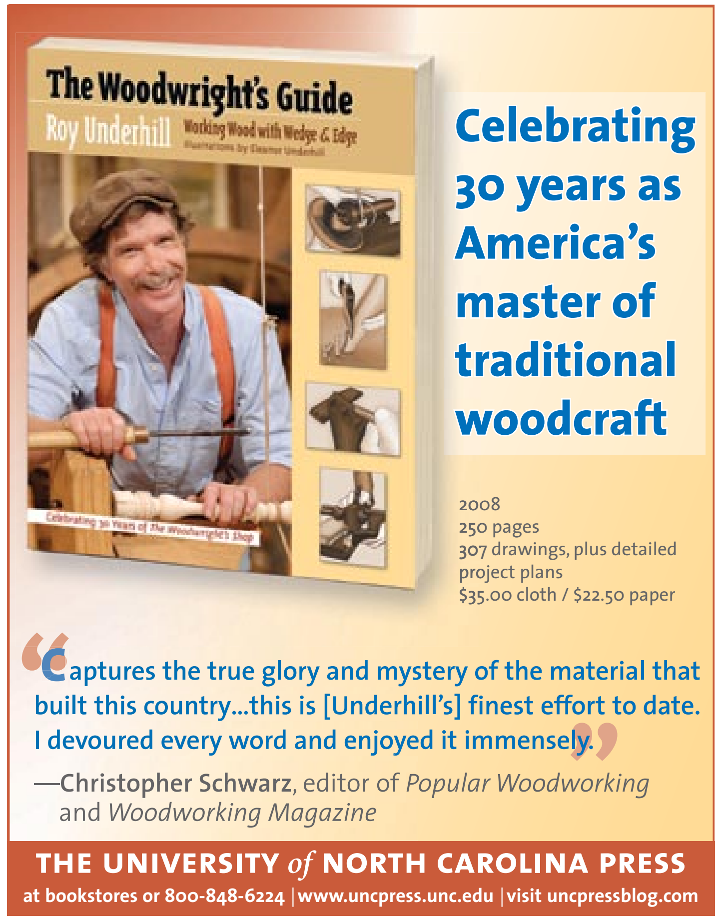

READER SERVICE NO. 126

READER SERVICE NO. 133

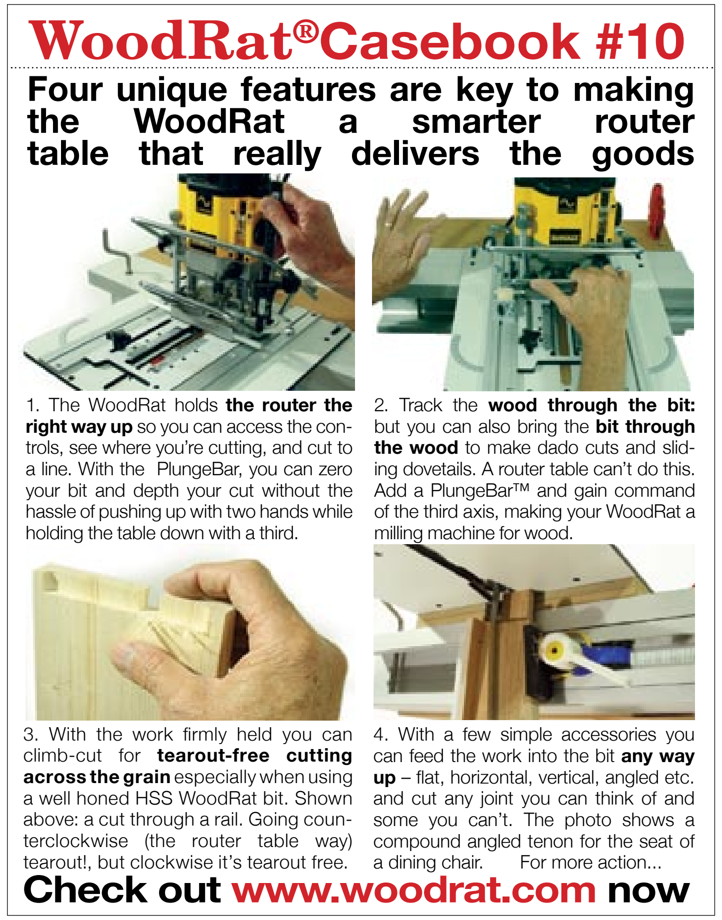

READER SERVICE NO. 123

Fine WoodWorking

75 CUSTOM PULLS

contents

NOVEMBER/DECEMBER 2008 ■ ISSUE 201

50 BETTER BOXES

features

36 A Trip to the Dovetail Doctor
Frustrated reader goes one-on-one with our expert
BY STEVE SCOTT

40 Protect Yourself From Wood Dust
Masks and respirators are the best defense against the most harmful dust
BY JEFF MILLER

45 COVER STORY Illustrated Guide to Drawers
The ideal drawer? That depends. Here's how to choose
BY MATTHEW TEAGUE

50 A Better Way to Build Boxes
Expert jigs and tips speed the process
BY DOUGLAS STOWE

56 Hang It Up
What goes on the wall stays on the wall with these tips for anchoring your work
BY ANISSA KAPSALES

62 The High Art of the Lowboy
Elevate your skills with a regal case piece
BY PHILIP C. LOWE

70 Success With Dyes
How to dial in the color and apply it evenly every time
BY JEFF JEWITT

75 4 Custom Pulls That Please the Eye
Clever jigs create the curves and facets on these small parts
BY MICHAEL C. FORTUNE

62 LOWBOY

40 DUST PROTECTION

Cover photo: Michael Pekovich

up front

6 On the Web

8 Contributors

10 Letters

14 Methods of Work
- Build better sanding blocks
- Modular workbench increases capacity
- Pipe-clamp spacers ease panel glue-ups

22 Tools & Materials
- New tools from IWF
- Router table has horizontal cutting option
- Paintball canister makes any nailer portable

28 Fundamentals
Mastering the card scraper

in the back

82 Readers Gallery

86 Q & A
- Which blades to buy for my bandsaw?
- Frame-and-panel door construction

92 Master Class
Carve a decorative fan

98 Finish Line
Finishes for foodware

108 How They Did It
The back cover explained

Back Cover
Carved in his memory

The Taunton Press
Inspiration for hands-on living®

FineWoodworking.com

on the web

THIS MONTH ON **FineWoodworking.com**

free online extras:

Available October 1 at www.finewoodworking.com/extras

VIDEO

What Ails Your Dovetails?

When a frustrated reader defied our experts to teach him to cut dovetails by hand, contributing editor Gary Rogowski ("A Trip to the Dovetail Doctor") took the challenge. Watch what happened.

Hanging Your Work

Associate editor Anissa Kapsales ("Hang It Up") gives you a closer look at ways to hang pieces on a wall with no visible means of support.

AUDIO SLIDE SHOW

Pro Portfolio

Learn more about how Duncan Gowdy (Back Cover: "Carved in His Memory") carves, bleaches, pickles, and stains wood to find landscapes in the grain.

plus:

- GALLERY OF READER WORK
- READER TOOL REVIEWS
- WOODWORKING BLOGS

"Charlotte" Chest of Drawers
Nancy Brady
Montreal, Que., Canada

online exclusives:

Become a member and access more than 30 years of *Fine Woodworking* articles, how-to videos, and exclusive Web content.

VIDEO PROJECT

One Bookcase, Two Looks

Starting October 21, only on FineWoodworking.com: Watch Phil Lowe construct a basic bookcase from hardwood plywood. He'll show you two ways to fashion the base: a simple flat version or an ogee bracket foot cut on the tablesaw and bandsaw. See every stage from start to finish, download a project plan, and ask Lowe questions in the Ask the Experts forum.

VIDEO

Learn to Use a Router Plane

Contributing editor Garrett Hack shows how to use this often-overlooked hand tool. Watch how easily it can clean up a hinge mortise.

plus:

- CURRENT ISSUE ONLINE
- ARCHIVES OF 1,300+ ARTICLES, AND PROJECT PLANS
- MORE THAN 400 SKILL-BUILDING VIDEOS
- ASK THE EXPERTS: John White on tools and shop machines

Fine WoodWorking

EDITOR **Asa Christiana**

ART DIRECTOR **Michael Pekovich**

MANAGING EDITOR **Mark Schofield**

MANAGING EDITOR, ONLINE **David Heim**

SENIOR EDITOR **Thomas McKenna**

ASSOCIATE EDITORS **Thomas G. Begnal, Steve Scott, Anissa Kapsales**

ASSOCIATE EDITOR, ONLINE **Gina Eide**

ASSISTANT EDITOR **Matthew Kenney**

SENIOR COPY/PRODUCTION EDITORS **Elizabeth Healy, Julie Risinit**

ASSOCIATE ART DIRECTOR **Kelly J. Dunton**

ASSISTANT ART DIRECTOR **John Tetreault**

SHOP MANAGER **Robert Nash**

ADMINISTRATIVE ASSISTANT **Betsy Engel**

CONTRIBUTING EDITORS **Christian Becksvoort, Gary Rogowski, Garrett Hack, Roland Johnson, Steve Latta**

CONSULTING EDITOR **Jonathan Binzen**

METHODS OF WORK **Jim Richey**

PUBLISHER **Anatole Burkin**

SENIOR MARKETING MANAGER **Melissa Robinson**

ADMINISTRATIVE ASSISTANT **Christina Glennon**

ADVERTISING DIRECTOR **Peter Badeau**

SENIOR NATIONAL ACCOUNT MANAGER **Linda Abbett**

NATIONAL ACCOUNT MANAGER **John Lagan**

SENIOR AD SALES SUPPORT ASSOCIATE **Marjorie Brown**

WOODWORKING BOOKS & VIDEOS
EXECUTIVE EDITOR **Helen Albert**

Fine Woodworking: (ISSN: 0361-3453) is published bimonthly, with a special seventh issue in the winter, by The Taunton Press, Inc., Newtown, CT 06470-5506. Telephone 203-426-8171. Periodicals postage paid at Newtown, CT 06470 and at additional mailing offices. GST paid registration #123210981.

Subscription Rates: U.S and Canada, $34.95 for one year, $59.95 for two years, $83.95 for three years (in U.S. dollars, please). Canadian GST included. Outside U.S and Canada, $41.95 for one year, $73.95 for two years, $104.95 for three years (in U.S. dollars, please). Single copy, $7.99. Single copies outside the U.S. and possessions, $8.99.

Postmaster: Send address changes to *Fine Woodworking,* The Taunton Press, Inc., 63 S. Main St., PO Box 5506, Newtown, CT 06470-5506.

Canada Post: Return undeliverable Canadian addresses to *Fine Woodworking*, c/o Worldwide Mailers, Inc., 2835 Kew Drive, Windsor, ON N8T 3B7, or email to mnfa@taunton.com.

Printed in the USA

HOW TO CONTACT US:

Fine Woodworking
The Taunton Press, 63 S. Main St., PO Box 5506, Newtown, CT 06470-5506 203-426-8171
www.finewoodworking.com

Editorial:
To contribute an article, give a tip, or ask a question, contact *Fine Woodworking* at the address above or:

Call: **800-309-8955**
Fax: **203-270-6753**
Email: **fw@taunton.com**

Customer Service:
For subscription inquiries, you can:

- Click on the Customer Service link at: **www.finewoodworking.com**
- Email us: **support@customerservice.taunton.com**
- Call our customer support center:
  To report an address change, inquire about an order, or solve a problem, call: **800-477-8727**
  To subscribe, purchase back issues, books or videos, or give a gift, call: **800-888-8286**

Advertising:
To find out about advertising:
Call: **800-309-8954**
Email: **fwads@taunton.com**

Member Audit Bureau of Circulation

Retail:
If you'd like to carry *Fine Woodworking* in your store, call the Taunton Trade Company at: **866-505-4674**

Mailing List:
Occasionally we make our subscribers' names and addresses available to responsible companies whose products or services we feel may be of some interest to you. Most of our subscribers find this to be a helpful way to learn about useful resources and services. If you don't want us to share your name with other companies, please contact our Customer Service Department at: **800-477-8727**

The Taunton Guarantee:
If at any time you're not completely satisfied with *Fine Woodworking*, you can cancel your subscription and receive a full and immediate refund of the entire subscription price. No questions asked.

Copyright 2008 by The Taunton Press, Inc. No reproduction without permission of The Taunton Press, Inc.

READER SERVICE NO. 106

contributors

Philip C. Lowe (*"The High Art of the Lowboy"* and Master Class) has devoted his life to woodworking. He's been a student, instructor, and department head at North Bennet Street School in Boston; he started his own furniture-making and restoration business; and five years ago he founded The Furniture Institute of Massachusetts (www.furnituremakingclasses.com), which offers a two-year full-time program as well as shorter classes. Lowe also teaches and demonstrates woodworking across the United States and Canada.

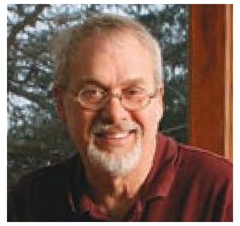

Doug Stowe (*"A Better Way to Build Boxes"*) has been a self-employed craftsman since 1975. Starting as a studio potter, he made the transition to woodworking and became known for his intricately inlaid wooden boxes and handcrafted furniture. The author of five woodworking books, he is a two-time Golden Hammer Award winner for best how-to writing from the National Association of Home Workshop Writers.

Jeff Miller (*"Protect Yourself From Wood Dust"*) turned to designing and making furniture 25 years ago, after a career as a classical musician. The founder of Furnituremaking Workshops in Chicago, he teaches a variety of woodworking classes there and around the country. Away from the shop, he is an avid cyclist, runner, and skier.

Matthew Teague (*"An Illustrated Guide to Drawers"* and Fundamentals) is a busy guy. Most of the time, he's caught between chasing his 2-year-old daughter, Ava Jean; starting the bed he promised his wife, Sarah, five years ago; building custom furniture in his new shop; or writing about the craft. To make matters worse, he recently began teaching furniture making and design, both on the road and in his shop in Nashville (www.matthewteague.com).

When he isn't running Homestead Finishing with his wife, Susan, **Jeff Jewitt** (*"Success With Dyes"*) can be found on his bicycle. Last year he pedaled 6,600 miles on the roads around Cleveland, Ohio. When out with a group of other cyclists, he likes nothing better than to accelerate up a hill with his friend Pete, leaving those half their age gasping in their wake.

For more information on our contributors, go to FineWoodworking.com/authors.

We are a reader-written magazine. To learn how to propose an article, go to FineWoodworking.com/submissions.

The Taunton Press
Inspiration for hands-on living®

INDEPENDENT PUBLISHERS SINCE 1975
Founders, **Paul and Jan Roman**

President
Suzanne Roman

EVP & CFO
Timothy Rahr

SVP, Operations
Thomas Luxeder

SVP, Creative & Editorial
Susan Edelman

SVP, Technology
Jay Hartley

SVP & Group Publisher, Home
Paul Spring

SVP & Publisher, Book Group
Donald Linn

SVP, Advertising Sales
Karl Elken

SVP, Enthusiast Group & Consumer Marketing
Janine Scolpino

VP, Human Resources
Carol Marotti

VP & Controller
Wayne Reynolds

VP, Fulfillment
Patricia Williamson

VP, Finance
Kathy Worth

VP, Taunton Interactive
Jason Revzon

VP, Single Copy Sales
Jay Annis

THE TAUNTON PRESS

Books: *Marketing:* Audrey Locorotondo. *Publicity:* Janel Noblin. *Editorial:* Helen Albert, Peter Chapman, Shauna Devlin, Jessica DiDonato, Courtney Jordan, Catherine Levy, Carolyn Mandarano, Jennifer Russell, Erica Sanders-Foege, Sharon Zagata. *Art:* Alison Wilkes, Katy Binder, Nancy Boudreau, Teresa Fernandes, Nora Fuentes, Amy Griffin, Sandra Mahlstedt, Lynne Phillips, Brooke Rane, Carol Singer. *Manufacturing:* Thomas Greco, Laura Burrone.

Business Office: Holly Smith, Patricia Marini. *Legal:* Carolyn Kovaleski. *Magazine Print Production:* Philip Van Kirk, Nicole Anastas, Jennifer Kaczmarcyk.

Circulation: David Pond, Andrew Corson, Catherine Hansen.

Distribution: Paul Seipold, Walter Aponte, Frank Busino, David DeToto, Leanne Furlong, Deborah Greene, Frank Melbourne, Reinaldo Moreno, Darian Pettway, David Rodriguez, Michael Savage, Alice Saxton.

Finance/Accounting: *Finance:* Brett Manning, Richard Rivellese. *Accounting:* Patrick Lamontagne, Priscilla Jennings, Lydia Krikorian, Michelle Mendonca, Judith O'Toole, Elaine Yamin, Carol Diehm, Dorothy Blasko, Susan Burke, James Foster, Lorraine Parsons, Larry Rice.

Fulfillment: Diane Goulart. *Fulfillment Systems:* Jodi Klein, Nancy Knorr, Thomas Kuzebski, Lorna McAllister. *Customer Service:* Kathleen Baker, Bonnie Beardsley, Deborah Ciccio, Katherine Clarke, Alfred Dreher, Paula Ferreri, Eileen McNulty, Patricia Parks, Deana Parker, Patricia Pineau, Betty Stepney. *Data Entry:* Anne Champlin, Mary Ann Colbert, Caryne-Lynne Davis, Maureen Pekar, Debra Sennefelder, Andrea Shorrock, Marylou Thompson, Barbara Williams.

Human Resources: Christine Lincoln, Wendy Tita, Dawn Ussery.

Information Technology Services: *Applications Development:* Heidi Waldkirch, Robert Nielsen, Linda Reddington, John Vaccino, Daniel Woodhouse. *Desktop and Network Support:* Petre Cotofana, Paul DelPadre, Adam Gregory, Michael Lewis.

Operations: Joseph Morits, Roberta Calabrese, John Gedney, Marc Imbimbo, Jennifer Licursi, Susan Nerich, Amy Reilly, Jim Sizemore, Denise Zor. *T Room:* Michael Louchen, Sarah Jeffrey, Anna Pendergast, Anne Scheurer. *Maintenance:* Lincoln Peters.

Promotion: Jane Weber, *Promotion Creative:* Jennifer Wheeler Conlon, Kirsten Coons, David Grosso, Michele Mayernik, Sandra Motyka, William Sims. *Promotion Operations:* Diane Flanagan, John Cavallaro, Kate Krentsa.

Taunton Creative: Michael Amaditz, Lucia Coccoli, Sarah Opdahl, Kat Riehle. *Photography:* Scott Phillips. *Video:* Dariusz Kanarek, Gary Junken, Michael Dobsevage.

Publishing Services: Deborah Cooper. *Prepress:* Richard Booth, William Bivona, David Blasko, Richard Correale, William Godfrey, Brian Leavitt, Chansam Thammavongsa. *Advertising Production:* Laura Bergeron, Lisa DeFeo, Patricia Petro, Kathryn Simonds, Martha Stammer.

TAUNTON DIRECT

Thomas Rossini, Donna Capalbo, Sandra Hannan, Michele Ladyko, Kathleen McGreevy, Michael Valanzola.

TAUNTON INTERACTIVE

Matthew Berger, Jodie Delohery, David Hall, Robert Harlow, Christopher Casey, Mark Coleman, Ruth Dobsevage, Lisa Durand, Erika Foreman, Mary Kate Grant, Shahul Kodakkadan, Geoff Krajeski, Steve Lombardi, Michael Stoltz, Dawn Viglione.

TAUNTON TRADE

John Bacigalupi, Brett DeMello, Allison Hollett. *Single Copy Sales:* Valerie Droukas, Mark Stiekman.

TAUNTON MAGAZINES

Fine Woodworking • *Fine Homebuilding*
Threads • *Fine Gardening* • *Fine Cooking*

Our magazines are for people who are passionate about their pursuits. Written by practicing experts in the field, Taunton Press magazines provide authentic, reliable information supported by instructive and inspiring visuals.

TAUNTON BOOKS

Our books are filled with in-depth information and creative ideas from the finest authors in their fields. Whether you're practicing a craft or engaged in the creation of your home, Taunton books will inspire you to discover new levels of accomplishment.

WWW.TAUNTON.COM

Our website is a place where you can discover more about the interests you enjoy, converse with fellow enthusiasts, shop at our convenient on-line store or contact customer service.

EMPLOYMENT INFORMATION

To inquire about career opportunities, please visit our website at careers.taunton.com. You may also write to The Taunton Press, Human Resources, 63 S. Main St., Box 5506, Newtown, CT 06470.

CUSTOMER SERVICE

We are here to answer any questions you might have and to help you order our magazines, books and videos. Just call us toll-free at 800-477-8727.

The Taunton Press, Inc., Taunton Direct, Inc., Taunton Trade, Inc., and Taunton Interactive, Inc., are all subsidiaries of Taunton, Inc.

READER SERVICE NO. 80

READER SERVICE NO. 130

READER SERVICE NO. 125

READER SERVICE NO. 46

letters

Spotlight

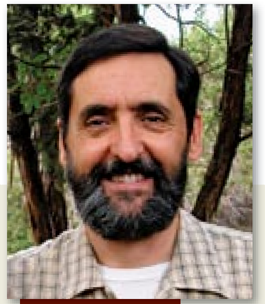
Paul Sellers

WOODWORKING IS THE PURSUIT OF EXCELLENCE

Over the past 30 years, as a woodworker first and then as the head of a woodworking school, I've watched *Fine Woodworking* magazine become the leading influence on a new type of craftsman.

The world of woodworking has changed radically over the last half century. Most woodworkers today see their craft not as much as a way of making a living, but more as a fruitful way of occupying their leisure time. And the definition of leisure has changed, too, from passive (watching TV, taking a drive) to more active and experiential (hiking wilderness trails, whitewater rafting, learning to cook). I see the type of woodworking offered at my school and in *Fine Woodworking* as an active pursuit.

Likewise, hobbyist woodworking has shed its past negative connotations to become a pursuit of serious people striving for levels of excellence equal to or surpassing the masters of old. No more: "You should see what that guy made—and he's just an amateur." *Fine Woodworking* put an end to that, showing what serious hobbyists are capable of.

Today's amateurs work with wood because they love it. The word amateur comes from the Latin word *amare*, to love. In fact, many professionals are really amateurs at heart: If they didn't get paid, they would still make things from wood. I consider myself an amateur who gets paid.

There is something intrinsically different about working with your hands and creating in three dimensions that cannot be attained in the two-dimensional world where most people live and work. I have trained more than 2,500 woodworkers in the fundamentals of this craft. Some put in another eight-hour day after they get home from work, and then work throughout their weekends.

If everything people produce is on a flat screen and printed paper, there is a void that must be filled. In our artificial world, woodworking stands out as a significant creative endeavor that anyone can aspire to.

—PAUL SELLERS, director, School of Woodworking, Homestead Heritage Craft Village, Elm Mott, Texas

John Brown's passing

I read John Brown's obituary (FineWoodworking.com) the day before I traveled to Country Workshops in North Carolina to attend a class on how to make a Welsh-style Windsor chair. School founder Drew Langsner was good friends with Brown, and their mutual exploration of the Welsh stick chair was the basis for the weeklong course. While there, I saw some examples of Brown's work. I was immediately impressed by his craft and care, and moved to model my chairs after his, including many of their details.

Now back at work, I find myself standing in the middle of a furniture factory, my ears deafened by the roar of the dust-collection system, shapers, CNC routers, and various other tools. Less than a week ago I held a drawknife, spokeshave, and plane in my hand. I look forward to picking up that shave once more. Brown's approach to the craft wasn't unique, but it continues to disappear. Mr. Brown, I never met you, but I won't forget you.

—GARY CRUCE, Seattle, Wash.

Easier way to tackle a serpentine drawer?

Jeff Headley's approach in "How to Tackle a Serpentine Drawer" (*FWW* #199) is certainly a tried-and-true method. I did some just like that many years ago with good success. It does, however, require a lot of gluing up, spokeshave work, and sanding to create each core, as well as close fitting of the caul, lots of clamping, and so on. To me, today's technology of vacuum pressing using flexible plywood is much better than the old method. I have used it successfully many times, and I can't help but wonder why Headley doesn't use it.

—J. ALBERT HUDSON, Knoxville, Tenn.

Author replies: Thanks for the question. My method comes from five generations of period construction and restoration

About your safety

Working wood is inherently dangerous. Using hand or power tools improperly or ignoring standard safety practices can lead to permanent injury or even death. Don't perform operations you learn about here (or elsewhere) until you're certain they are safe for you. If something about an operation doesn't feel right, find another way. We want you to enjoy the craft, so please keep safety foremost in your mind.

work. The latter is the best way to see what worked and what didn't.

I have not worked much with flexible plywood, but I have a few concerns about using it. The first is whether I can trust the glue joint between the veneer and plywood to give enough structural stability.

Secondly, I prefer handwork, as do my clients. Most people looking to purchase handmade pieces will open a drawer to see how it's made. I would not want to try hand-cutting dovetails into plywood, and even if I cut the dovetails with a bandsaw, I cannot see flexible plywood holding them.

> "Most people looking to purchase handmade pieces will open a drawer to see how it's made." —JEFF HEADLEY

As for a vacuum press, I do have one and I use it for many situations. But with the small width of my drawer fronts, I found it easier and quicker just to clamp them instead of dragging out the vacuum bag and pump. Plus, not everyone reading *FWW* has a vacuum press. I hope I have answered your questions, but more likely I have given you a few more.

—**JEFF HEADLEY**, Berryville, Va.

Many fine suppliers for Western woods

I run a lumber-supply company. When I saw that you had an article on Western hardwoods ("5 Overlooked Woods," *FWW* #200), I was excited that this informative magazine was going to put a spotlight on our beautiful domestic hardwoods. Sadly, I was disappointed.

The article implied that highly figured Western hardwoods can be had for \$4 to \$7 a board foot. This is unrealistic. For example, the myrtle (bay laurel) tabletop was \$38 a board foot. I know that because the maker, Aaron Levine, purchased it from us.

Also, the author's information about *Juglans hindsii* (claro walnut) was inaccurate. We never have to go more than 50 miles from our business in Jefferson, Ore., to buy claro. The article leads the reader to believe that claro only grows in patches of northern California. I have personally seen it as far north as Olympia, Wash., and in the eastern parts of Oregon and Washington.

Last, there are several reputable businesses on the West Coast that sell the hardwoods featured in this article. Many of these businesses have been advertising with *Fine Woodworking* for years. Instead, the author of the article chose to promote just a few hardwood places in California that she had dealt with personally. And none have online stores.

—**LEWIS JUDY**, Northwest Timber, www.nwtimber.com

Author replies: You make a good point about bay laurel. While I purchased all of the raw samples shown in the article for the prices I quoted, readers should always expect to pay more for boards that have an added attraction such as extreme figure, exceptional width, or being part of a book-matched set or flitch.

The term claro walnut has become less identifiable with the specific variety of walnut, *Juglans hindsii*, and is being used more as an adjective describing certain colors and patterns that are associated with it. Oregon black walnut (*Juglans nigra*) is every bit as desirable a wood as the northern California walnut (*Juglans hindsii*), but all my sources (books and forestry experts) say it is not the same tree. Adding to all this confusion and hubbub is the number of walnut hybrids (natural and man-made) in California and Oregon.

For a more comprehensive list of suppliers of Western hardwoods, go to FineWoodworking.com/extras.

Better way to square a fence

In "Ultimate Crosscut Sled" (*FWW* #199) the author shows how he squares the fence on the sled. I have a better way to square the crosscut fence on any saw. Take a roughly square board and number each side consecutively 1 through 4. As you cut each side, rotate it in the same sequence. After you cut the fourth side, check it against the fence and blade. Try it and see how accurate and easy it is.

—**MARIO RUBIO-OSPINA**, Arlington, Mass.

Upgrade for the rotating tool cart

When I came across the workshop article by Matthew Teague in the winter *Tools & Shops* issue (*FWW* #195) I knew I had to have the rolling cart with the rotating top for storing and using multiple tools. The top works great, but I improved it by adding a pair of 4-in. barrel bolts (the hardware-store variety that keep doors closed) on each side to stabilize the top when the planer is in use.

—**JERRY CRAWFORD**, Fort Collins, Colo.

Sources for stringing and clockworks

Dover Inlay, a source for stringing cited in a recent Master Class ("Fine Line Dresses Up a Drawer Front," *FWW* #199), is no longer in business. But their stock is now available from Dover Designs (go to www.doverdesignsllc.com or call 301-733-0909).

The clockworks for W. Patrick Edwards' tall-case clock (Readers Gallery, *FWW* #199) were purchased from Hartwig's Clock Company, which has changed its name to David Lindow Clockworks (www.lindowclockmaker.com).

Correction

In "The Rule Joint Done Right" (*FWW* #200), the mating bullnose (half-round) and core-box router bits are ¾-in. diameter, not ¾-in. radius, as described. However, the Freud product numbers for those bits (18-122 and 82-116) were correct.

EDITED AND DRAWN BY JIM RICHEY

FLAT SANDING PLANE

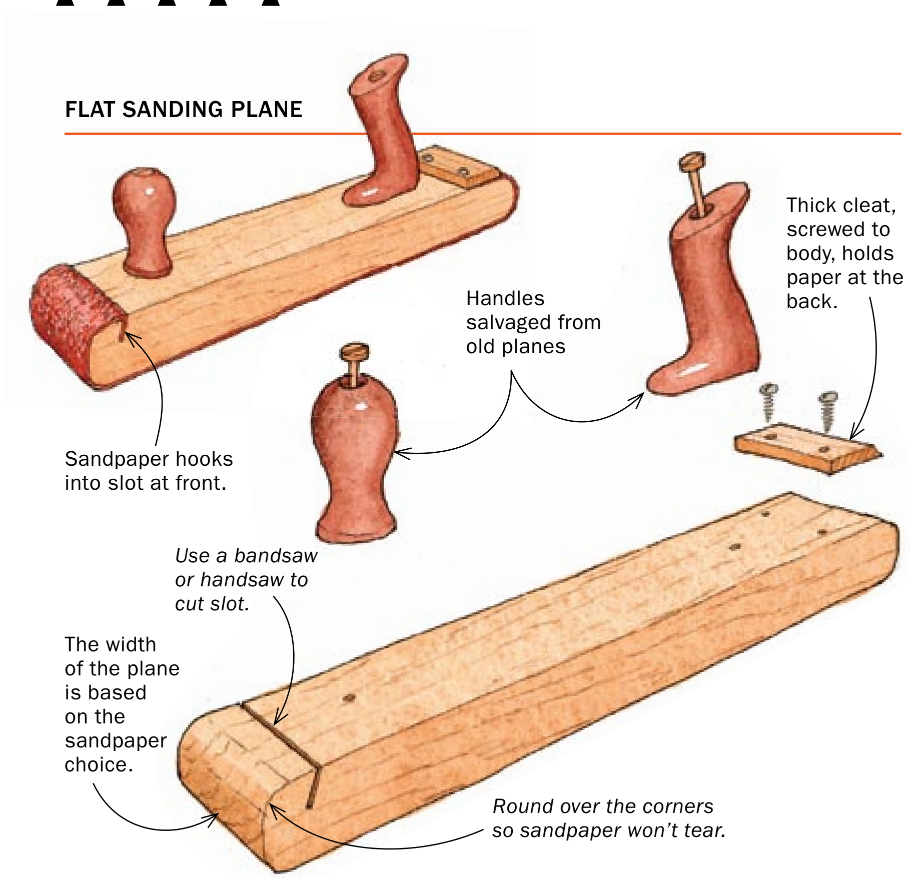

CONVEX SANDING PLANE

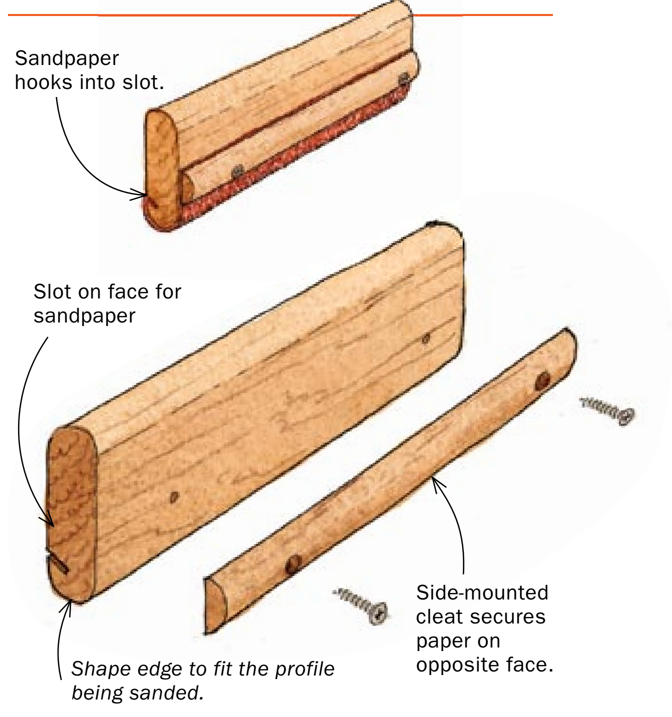

Best Tip Build better sanding blocks

Tom Fidgen owns a one-man boat-building operation and builds custom furniture between boat orders. He incorporates hand-cut joinery into most of his pieces. Though he loves working with wood, he hates sanding.

One day I was thinking about the interminable sanding process—the scratch-scratch-scratching on up through the grits ... 120, 150, 220—and how I could make it a little more enjoyable. The idea that popped into my head was this supercharged, pimped-out sanding block—what I call a sanding plane—and in less than an hour I had built one.

Since then I've built several more, each adapted to a specific function. You can make a sanding plane with a thick hardwood sole for smoothing flat surfaces; you can use a thinner sole to make a plane that has some flex for smoothing large curved surfaces, like a coopered door; and you can make sanding planes to smooth various molding profiles (a convex version is shown).

To make a flat plane, start with a heavy piece of straight-grain hardwood, milled to about 2¼ in. thick. Cut it to length (the plane shown is about 16 in. long, but you can make them any length) and then joint the bottom and one side. Now rip the block to width, which depends on your selection of sandpaper. This plane uses a length of 3-in.-wide abrasive cloth from a sanding belt, so it's 3 in. wide. I also like to use premium B-weight sandpaper that is 4½ in. wide and comes in 30-ft. rolls (Lee Valley is one supplier). Handles help control the long plane; you can make your own, or salvage them, as I did. To load the sanding plane, slip the paper in the front slot, wrap it around the sole, and then thread it under the cleat and screw it in place.

To make a molding sanding plane, cut a blank to about 9 in. long (the thickness will depend on the profile to be smoothed). Rout the profile on one edge and round over the edges on the opposite side. Cut the slot, add a cleat, and start sanding.

—TOM FIDGEN, Nova Scotia, Canada

A Reward for the Best Tip

Send original tips to Methods of Work, *Fine Woodworking*, PO Box 5506, Newtown, CT 06470, or email fwmow@taunton.com. If published, we pay $50 for an unillustrated tip; $100 for an illustrated one. The author of the best tip gets a Leigh 18-in. Superjig, with the vacuum/router-support accessory.

Reserve today... sells out every year!

Fine Woodworking invites you to

Working Wood in the 18th Century

Bedroom Furniture

THE 2009 COLONIAL WILLIAMSBURG CONFERENCE

Learn how woodworkers designed and built the furniture that graced well-furnished, early American bedrooms, from mid-century low- and tall-post beds, to an elaborately decorated Federal lady's dressing table, looking and dressing glasses, and a mahogany child's cradle. All presented by Colonial Williamsburg Historic Trades cabinetmakers and guest experts.

This 11th annual conference includes joinery, shaping cabriole legs and claw-and-ball feet, carving, reeding and fluting, gilding, and veneer decoration—as well as discussions of design and style. In addition, there are sessions on casting brass furniture hardware and on the latest research information about how beds were dressed with their sometimes complex and cleverly engineered hangings, making them one of the most elaborate and expensive forms of eighteenth-century furniture.

TWO SESSIONS: January 7–10 and 11–14, 2009

4 easy ways to register and make room reservations

Online: ColonialWilliamsburg.org/ContEd

Phone: 800-603-0948 Monday-Friday, 8:30 a.m.-5:00 p.m. Fax: (757) 565-8921

Mail: Colonial Williamsburg Foundation Office of Conferences, Forums and Workshops Post Office Box 1776, Williamsburg, Virginia 23187-1776

SPEAKERS INCLUDE

Tara Gleason Chicirda, curator of furniture, Colonial Williamsburg
Beth Gerhold, textile refurnisher, Colonial Williamsburg
Mack Headley, master cabinetmaker, Colonial Williamsburg
Kim Ivey, associate curator of textiles and needlework, Colonial Williamsburg
Steve Latta, educator and craftsman, Thaddeus Stevens College, Lancaster, Pennsylvania
Kaare Loftheim, journeyman cabinetmaker, Colonial Williamsburg
Bill Pavlak, apprentice cabinetmaker, Colonial Williamsburg
Chris Swan, furniture conservator, Colonial Williamsburg
Brian Weldy, apprentice cabinetmaker, Colonial Williamsburg

Fine WoodWorking — MORE THAN 30 YEARS

Colonial Williamsburg — WILLIAMSBURG, VIRGINIA

© 2008 The Taunton Press

SENCO®

Mg Series

These ultra-light magnesium tools provide the dependability you have come to expect from all of your Senco finish tools. With metal cylinders and radiated bumpers these highly featured tools are designed to last a lifetime.

1 Weighs as little as 2.19 lbs.
2 Metal cylinder and radiated bumper increase overall tool life.
3 Select trigger mode with the flip of a switch.
4 Tool free depth of drive delivers perfectly countersunk fasteners.
5 Adjustable rear exhaust keeps dust and debris off of work surfaces.
6 Adjustable belt hook always keeps your tool at the ready.
7 360° Swivel plug.

800-543-4596 • www.senco.com

READER SERVICE NO. 129

Modular workbench increases capacity

When I began planning a workbench, I knew I wanted a big one—an 8-footer. But during the construction of the bench, I decided to make it in two sections, one 6 ft. and one 2 ft., to gain flexibility.

Now with the two modules together, I have my 8-ft. bench. But I can make the bench longer, if necessary, simply by pulling apart the modules. I also can take advantage of the gap between modules, clamping a workpiece to the top of both benches for crosscutting and eliminating the need for sawhorses or support stands. I can rearrange the modules to make it easier to support workpieces of different shapes.

—RICHARD ROSS, Sidney, Neb.

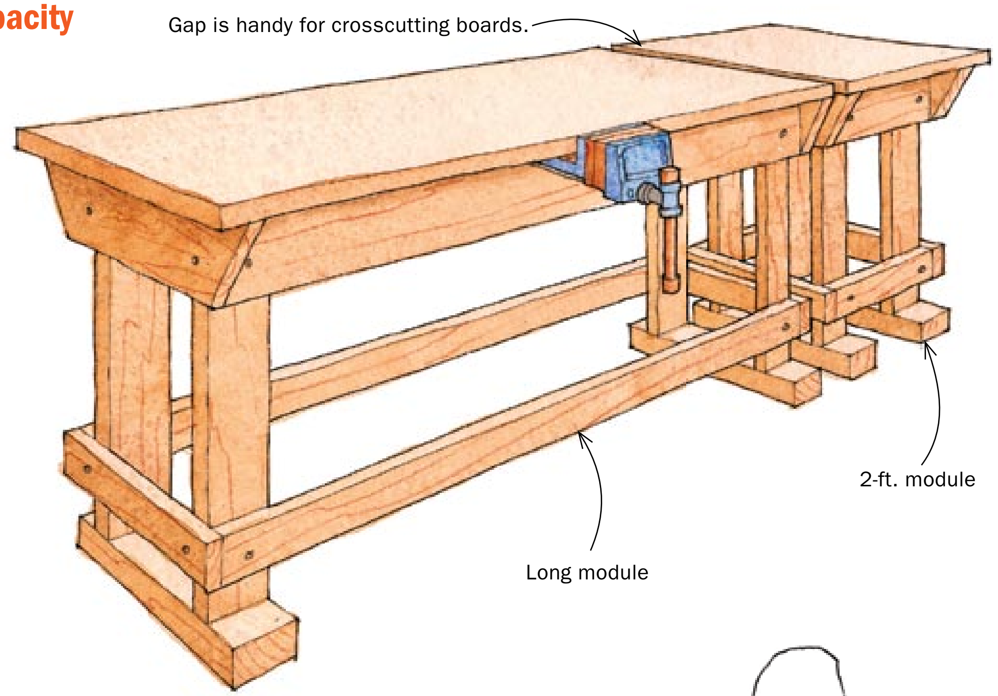

Quick Tip

If you use an oil- or waterstone for sharpening, here are a few tips that help suspend the sharpening shavings in the slurry, speeding and improving the sharpening process. First, use filtered or distilled water. Second, mix a small amount of dishwashing detergent into the water. Finally, use high-detergent power-steering fluid for the oil.

—RANDOLPH KENT TORRES, Pittsburg, Calif.

Nonslip fence for a biscuit joiner

The biscuit joiner is invaluable for making joints in a snap. However, the tool tends to shift as the blade enters the cut. To hold the joiner steady, manufacturers install pins in the fence, but the pins don't always work when a workpiece is narrow, hard, or slippery.

To improve the grip of the fence, I added a layer of fine-grit adhesive-backed sandpaper. This simple addition is like adding snow tires to your car.

—SERGE DUCLOS, Delson, Que., Canada

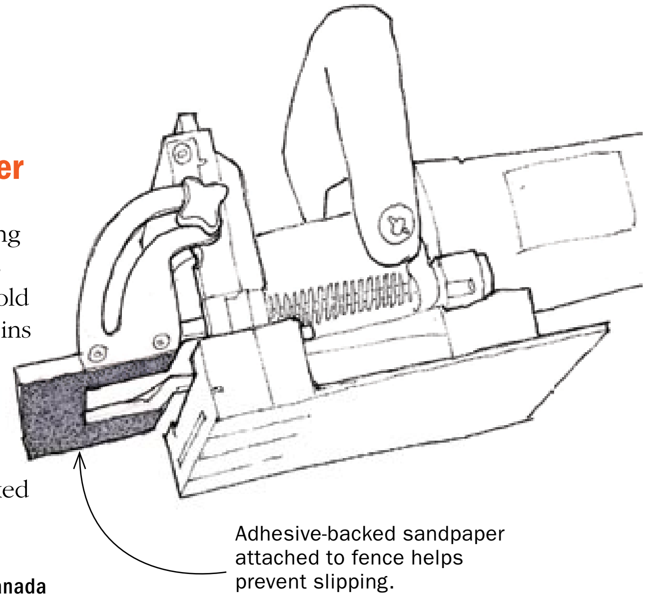

Pipe-clamp spacers ease panel glue-ups

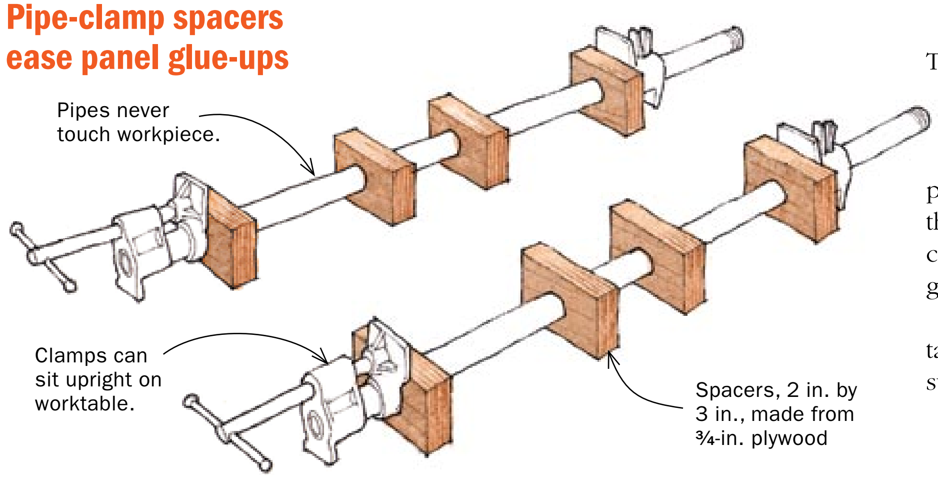

These simple pipe-clamp spacers, made from ¾-in. plywood scraps, elevate a glued-up panel away from the pipes, leaving enough room to wipe glue squeeze-out from the pipes and preventing unsightly pipe stains on the workpiece. The spacers also allow the pipe clamps to sit upright on a table, making panel glue-ups a breeze.

Place the blocks between the clamp head and tail, making sure you use enough spacers to support all of the boards being glued.

—RALPH PASQUINELLI, Batavia, Ill.

Holder keeps power cords tangle-free

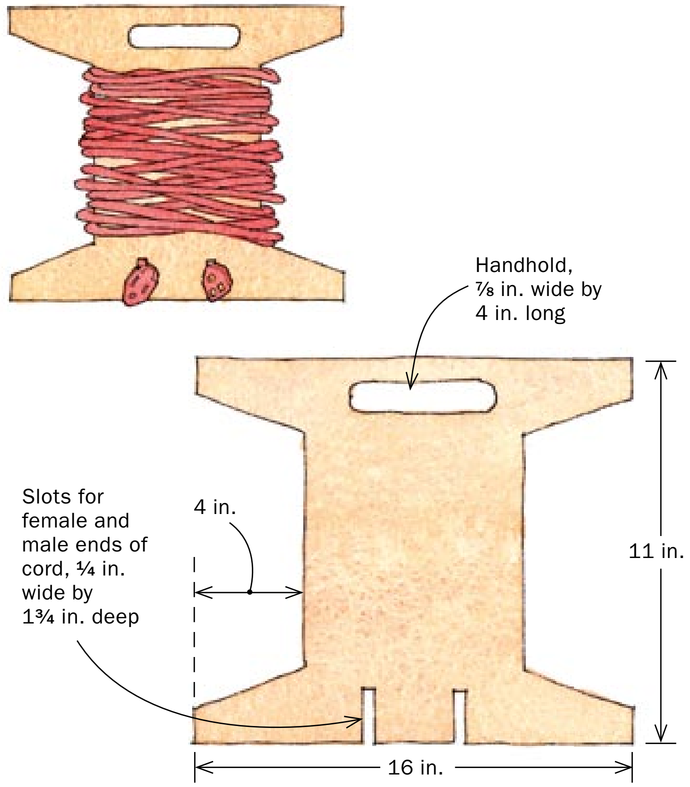

I became tired of looking at and trying to work with the tangle of electric cords that I use both in my shop and outside for other projects. So I made a simple cord-winding rack that keeps both ends of the cord accessible and can be carried conveniently to and from the work locations. The rack is also easy to hang from its handhold.

It took about 30 minutes to make the ¾-in.-thick plywood rack shown here, which can hold up to 100 ft. of heavy-duty cable. Delighted with the results, I promptly made two more.

—JOE COLE, Escondido, Calif.

Quick Tip

When I built my router table, I laminated two thicknesses of MDF, then encased it in white kitchen-counter laminate. I didn't particularly plan for white, but the stuff was cheap at the time. Since then, I've found that the white surface makes a great place to jot notes or arrows to remind myself to run a board through a certain way (face down, for example) or to raise the bit 1⁄16 in. for the next pass. I use a regular pencil to write on the board and a damp rag to erase.

—JIM TREECE, Knoxville, Tenn.

VAKuum Pressing
VENEERING ~ LAMINATING

Frame Press Sizes
4' x 8' to 5' x 10' Standard
Available with complete aluminum table base
CALL ANYTIME
FREE 2 Hour DVD or 2 CD-ROM Instructional Video
800 547-5484
COMPLETE 5 CFM System with 8'6" x 52" Poly Bag
Also comes with 25 lbs. of VAK-Bond 2000 Veneering Glue

NU-Matic Series
Highest Reliability
2 year warranty
5 other models
UP-Gradable
All Air - No electricity required
$895 retail $1,062

VAK-Matic Series
Economical
1 Year Warranty
5 Models
UP-Gradable
$795 retail $942

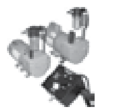

Electric Series
Convenient - Plug in any where
3 Models
1 Year Warranty
$975 retail $1,092

Your 1 Stop Shop for your veneering and laminating system and accessories
Quality VAKuum Products, Inc.
43 Bradford Street Concord, MA 01742
Phone: (978) 369-2949 Fax: (978) 369-2928
Q.V.P.
www.qualityvak.com

RIKON

AWARD-WINNING TOOLS
www.rikontools.com

READER SERVICE NO. 110

The Burgess Edge
Pat. # 5,996,659

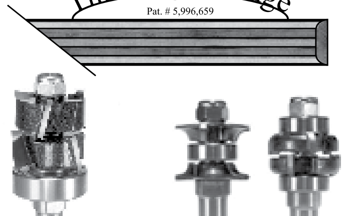

Introducing the innovative **Burgess Edge** Sheer-Cut Pattern Bit. Another solution from the folks who gave you the best edgebanding system available today.
210 Browns Rd., Lincoln, VT 05443
Phone: 802-233-1489 • E-mail: bmichael@sover.net
www.burgessedge.com

READER SERVICE NO. 117

ROCKLER®
WOODWORKING AND HARDWARE
Create with Confidence™

Rockler's Exclusive Table Saw Crosscut Sled - 33113

Perfect Accuracy Every Time

When the margin for error is miniscule, a woodworker's tools take on a new level of importance. With an oversized protractor scale and simple micro-adjustability, the Rockler Crosscut Sled delivers perfect accuracy every time, so that even in unforgiving situations, you can always expect the best—another way Rockler helps you ***Create with Confidence.***

Rockler Woodworking and Hardware - Since 1954

For a store near you or free catalog visit Rockler.com | 1-877-ROCKLER

READER SERVICE NO. 89

READER SERVICE NO. 85

Forrest Blades

Experienced woodworkers know that Forrest blades are ideal for remodeling high-end kitchens and baths.

Forrest blades deliver smooth, quiet cuts *without* splintering, scratching, or tearouts. Our proprietary manufacturing process, hand straightening, and unique grade of C-4 micrograin carbide are perfect for cabinets, countertops, and flooring. In fact, independent tests rate us #1 for rip cuts and crosscuts.

"Your blades are without question the best by miles, and I have tried them all."
Bob Jensen, Fridley, MN

Order from any Forrest dealer or retailer, online, or by calling directly. Our blades are manufactured in the U.S.A. and backed by our *30-day, money-back guarantee.*

Forrest Quality Shows

Duraline Hi-AT—Great for cutting two-sided veneers and low pressure laminates.

Woodworker II—Best rated, all-purpose blade for rips and crosscuts.

FORREST
The First Choice of Serious Woodworkers Since 1946

www.ForrestBlades.com
1-800-733-7111
(In NJ, call 973-473-5236)

© 2007 Forrest Manufacturing Code FWW

READER SERVICE NO. 108

READER SERVICE NO. 40

READER SERVICE NO. 51

tools & materials

ACCESSORIES

Router table has horizontal cutting option

ALL GOOD ROUTER TABLES HAVE THE FOLLOWING: a large, flat table; a rigid mounting plate that's perfectly flush with the table; a flat, square-to-the-table fence that slides easily and locks in place securely; easy access to the router for changing bits and setting the bit height; and, lastly, a dust-collection port.

A new router table from Production Designs offers all these features, plus the option of mounting the router horizontally, making certain tasks easier and safer.

When using a horizontal router to raise panels or cut tenons, for example, the stock goes face down on the table, which gives it plenty of support during the cut.

The table's base isn't included, so you can design one, or use the included plans for a benchtop or a floor-standing base. The router table sells for $496. It includes the table, mounting plate, mounting-plate insert, fence, miter fence, and horizontal-routing mounting plate. For information, call 610-777-7750.

—Tom Begnal is an associate editor.

Routing options. *Production Design's router table lets you mount a router either vertically or horizontally (above). Another helpful feature, especially for end-grain routing, is a 90° miter fence that rides on the main fence (left).*

TRADE SHOW

New tools star in Atlanta

This past August, as I do every couple of years, I had Georgia on my mind. That's when the *FWW* editors attend the biennial International Woodworking Fair (IWF) in Atlanta. It's the place to be for anyone who understands the difference between a rabbit and a rabbet.

Like bloodhounds on a mission, we wandered the show floors, sniffing out a number of interesting new tools. Here's a sampling of what we spotted. Look for some of the tools to get a full review in an upcoming issue of the magazine.

Online Extra

To see videos of the Delta Unisaw, Powermatic bandsaw, and even more new tools, go to **FineWoodworking.com/extras.**

DELTA UNVEILS REDESIGNED UNISAW

Delta's new Unisaw is indeed new, as it has been completely re-engineered. The old-fashioned splitter system has been replaced with a riving knife, so kickback is far less likely. A clever tool-free adjustment mechanism allows the same riving knife to be adjusted up or down for through-cuts or slot-cutting.

Three models will be available, all left-tilting—two 3-hp models with rip capacities of 36 in. or 52 in., and a single 5-hp model with a 52-in. rip capacity. The saws are made and assembled in Tennessee and powered by American-made Marathon motors.

For convenience, Delta put both the blade-elevation crank and the blade-tilt crank at the front of the saw. The blade-bevel gauge, which Delta claims is accurate to within ½°, is located between the cranks. Stops for the blade-tilt (at 45° and 90°) are quickly and easily adjusted with large socket-head screws on the front of the cabinet, a system that's easy to like. A tool-free arbor-lock makes single-wrench blade changes easy.

The Delta Unisaw will be available in early 2009. As we went to press, the price was

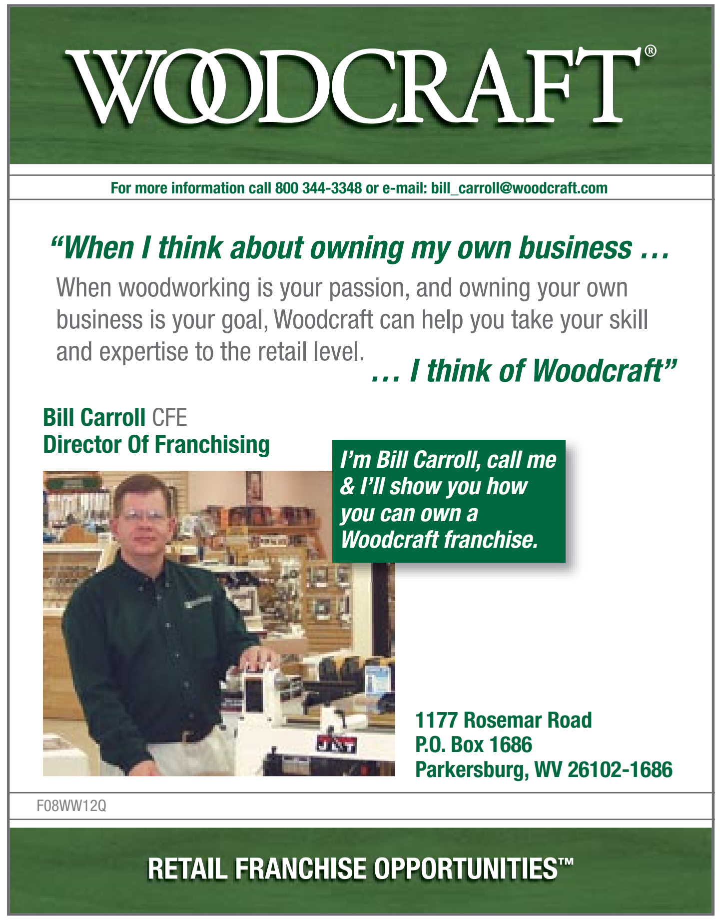

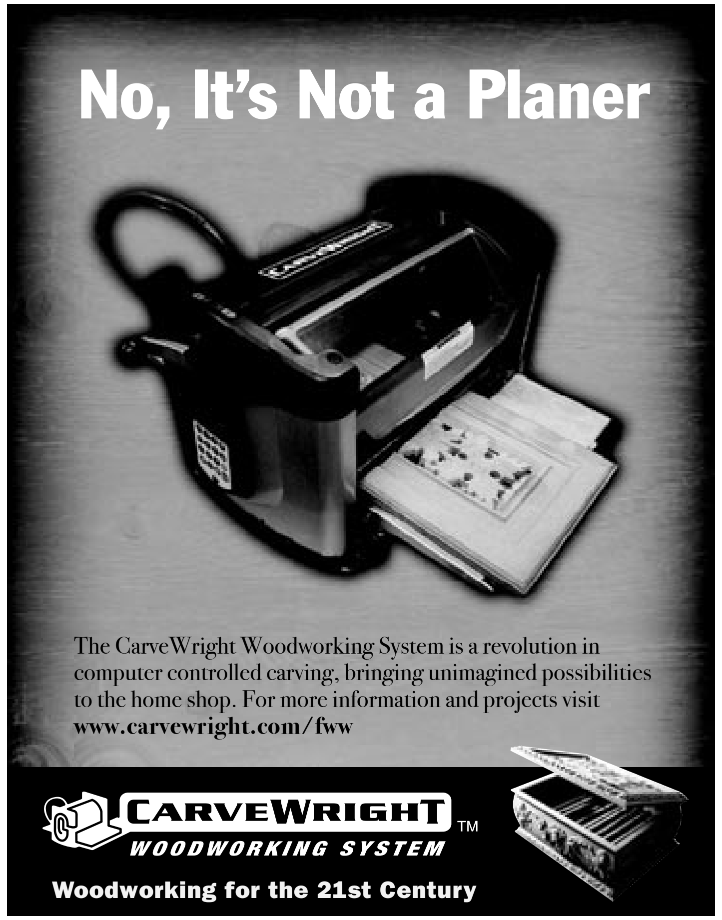

READER SERVICE NO. 22

READER SERVICE NO. 13

■ AIR TOOLS

Paintball canister makes any nailer portable

COMPRESSED CARBON DIOXIDE HAS LONG PROVIDED the get-up-and-go in guns that fire pellets and paintballs. Now it can power nail guns, too. A new product, called the JacPac, lets you drive nails and brads without an air compressor or fuel cell. The power comes from a lightweight canister that hooks on your belt. The canister is filled with CO_2 compressed to about 825 psi.

JacPac says a single 9-oz. cylinder of CO_2 has enough power to drive nearly 700 1-in.-long brads. I didn't do a test to check that number, but I did fire at least 250 1-in. brads and the canister still had plenty of pressure. According to the manufacturer, it can power any standard pneumatic tool, and that includes nail guns that fire brads, finish nails, and framing nails.

The 9-oz. cylinder, regulator, and hose weigh less than 4 lb. Expect to pay about $3 to refill the canister at most paintball or sporting-goods stores. The JacPac retails for $90. For more information, go to www.jacpacco2.com or call 800-567-0864.

—Contributing editor Roland Johnson is a woodworker and writer in Sauk Rapids, Minn.

■ TRADE SHOW (CONTINUED)

not finalized. For more information, go to www.deltaportercable.com.

BESSEY UPGRADES K BODY

Bessey Tools has improved its venerable K Body parallel clamp. The new clamp, called the K Body Revo, has some advantages over the original model.

Each jaw has about 30% more surface area. A larger, soft-grip handle makes it easier to add extra force when tightening the clamp. According to Bessey, the new clamp can generate 1,500 lb. of pressure, a significant improvement over the older model.

Also new is a plastic end piece that keeps the bar from tipping when the jaws are working close together. This end piece is removable, so you can remove and reverse the jaw and use the clamp as a spreader. The Bessey K Body Revo is made in eight lengths ranging from 12 in. to 98 in. You'll pay about $36 for a 12-in. model; $50 for a 50-in., and $72 for a 98-in. You can find more information at www.besseytools.com.

AFFORDABLE SLOT MORTISER FROM LAGUNA

At the Laguna booth, we found the new Platinum Series Slot Mortiser that sells for $995. The machine is powered by a 3-hp, 220v reversible motor with a ⅝-in.-dia. chuck. The 8-in.-deep by 19½-in.-long worktable moves 5½ in. vertically, 5½ in. front to back, and 11 in. side to side. To learn more, visit www.lagunatools.com.

STEEL CITY PORTABLE PLANER HAS SPIRAL CUTTERHEAD

At the Steel City Toolworks booth, we saw the first portable planer equipped with a spiral cutterhead.

Photos: staff

READER SERVICE NO. 49

READER SERVICE NO. 127

READER SERVICE NO. 16

READER SERVICE NO. 58

READER SERVICE NO. 21

READER SERVICE NO. 115

READER SERVICE NO. 79

■ POWER TOOLS

Hybrid plunge router has plenty of power

I OFTEN MARVEL AT THE EXPLOSION OF NEW TOOLS that has hit the market since I first took up woodworking some 30 years ago. The new T4 plunge router from Trend is a good example—a sort of hybrid size that falls between a full-blown bench router and a much smaller trim router.

It weighs just under 8 lb., with a motor rated at 6.6 amps (850 watts, 1.1 hp). After giving the T4 a good workout in my shop, I was impressed by the performance. I tested it on plywood and lumber with several types of bits, including a 1³⁄₁₆-in.-dia. rabbeting bit (the largest size Trend recommends for this router). The T4 had plenty of power. Changing bits was a breeze, using a single wrench and the spindle lock provided.

The top of the motor has a speed-control dial ranging from 11,500 to 32,000 rpm, convenient for fine-tuning the tool to the task at hand. The 4-in. by 5¾-in. base can accommodate a guide fence, which is included.

The T4 sells for $130. For more information, including dealer locations, go to www.trend-usa.com.

—William Duckworth is a former associate editor.

■ TRADE SHOW (CONTINUED)

The planer, model number 40200H, will be available in November. Expect to pay about $750. The same planer, with a straight-knifed cutterhead, model 40200, costs around $440. For more information, go to www.steelcitytoolworks.com.

SIDE RABBET PLANE FROM LEE VALLEY

Lee Valley showed us its new side rabbet plane. We've all cut rabbets, dadoes, and grooves that end up slightly narrow. When that happens, the best solution for a perfect fit is to trim the side walls. That's what the side rabbet plane is designed to do.

It can be used in rabbets, dadoes, and grooves as deep as ½ in. and as narrow as ³⁄₁₆ in. The cast-iron plane body has two cutting blades made from 01 tool steel, one on each side of the plane body, plus a spring-loaded pivoting handle that can be used in either hand to cut in either direction along the rabbet, dado, or groove. The Veritas Side Rabbet Plane sells for $140. For more information, go to www.leevalley.com.

POWERMATIC ROLLS OUT FLAGSHIP BANDSAW

Designed as a no-compromise machine from the ground up, the PM1800 stood at the front of the Powermatic booth, clearly the company's big news at the show. The price tag is high for an 18-in. bandsaw, but this one seems to have everything a serious woodworker needs.

Unique blade guides are just one of the innovations on this 5-hp machine. For $4,000, you get an industrial strength saw built to make flawless resaw cuts in your widest planks and cut smooth curves with your tiniest blades. For more information, go to www.powermatic.com.

—T.B.

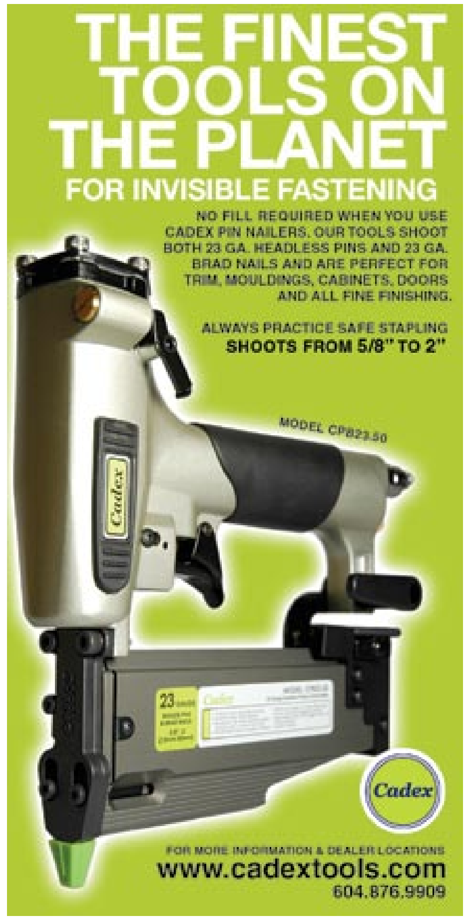

READER SERVICE NO. 122

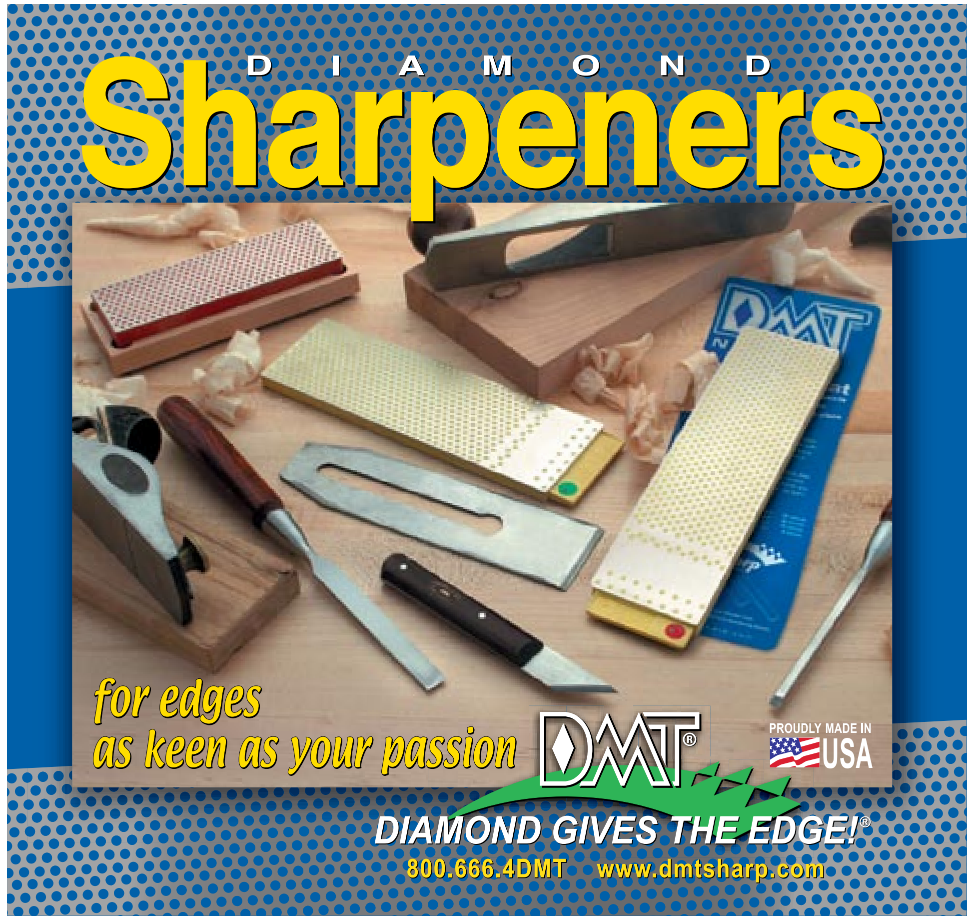

READER SERVICE NO. 45

READER SERVICE NO. 92

Mastering the card scraper

THIS SIMPLE TOOL TRANSFORMS THE WAY YOU PREPARE SURFACES

BY MATTHEW TEAGUE

Of all the tools in my shop, my favorite is the basic card scraper. It's nothing more than a thin piece of steel that costs a few dollars, but it greatly reduces my least favorite part of woodworking: sanding.

The scraper cleans up tool and milling marks, levels glue-ups, and smooths surfaces. It removes material as efficiently as sandpaper but doesn't leave scratches in its wake. A scraper is easier to control than a handplane and can surface tricky grain where even a well-tuned plane does more harm than good.

Tuning a card scraper is relatively easy using only a mill file, sandpaper, and a screwdriver. Using a card scraper takes practice, but only a little. In a very short time, you'll be able to cut continuous shavings akin to those you get with a handplane.

Tune-up starts with a mill file

New scrapers need a tune-up, and you'll have to repeat it from time to time, but the good news is that the process only takes three or four minutes.

First, file the long edges flat and square to the faces of the scraper. You can clamp the scraper in a vise and work the edge freehand with a standard mill file, or lay the file flat on the bench and work the scraper across it. Take full-length strokes until you feel and hear the file cut continuously.

Next, flatten the scraper's faces. Use a flat sharpening stone or 180-grit wet-or-dry sandpaper attached to a flat surface. Don't work the entire face, just the leading ½ in. or so. Use all eight fingers to apply even pressure, and work until you see a smooth surface with fresh steel exposed all the way to the edge. Then move to 320-grit paper to achieve a cleaner surface. If I'm trying to achieve a very fine,

Uses

REMOVE MILL MARKS

A scraper is ideal for cleaning up light tearout and marks from jointers, planers, and handplanes.

CLEAN GLUE

Dried squeeze-out comes off easily. Avoid an aggressive cut, which can dish the glueline.

TRIM EDGING

The cut is adjustable enough to trim solid edging flush and avoid damaging the plywood veneer.

WORK TRICKY GRAIN

The scraper works lightly, taking clean shavings despite treacherous changes in grain direction on this walnut-burl board.

Photos and drawings: staff

READER SERVICE NO. 31

READER SERVICE NO. 35

READER SERVICE NO. 30

READER SERVICE NO. 140

READER SERVICE NO. 4

READER SERVICE NO. 84

Tune-up

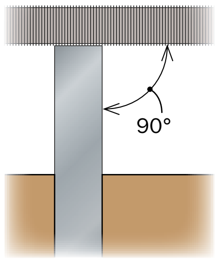

FILING AND HONING

Before you can form consistent burrs at the edges, it is crucial that the edge and sides are smooth and meet at 90°.

Sharpening starts with a file. *Secure the scraper in a vise and use a mill file to remove hardened steel and square the edge. Be sure to keep the file at a 90° angle to the faces of the scraper.*

Next hone the faces. *Work the scraper back and forth on a sharpening stone or sandpaper set on a flat surface. Use eight fingers to apply even pressure (top). A mirror finish isn't crucial, but a smoother surface (bottom) yields a more uniform burr.*

finish cut, I sometimes move on to 400 or even 600 grit.

These filing and flattening steps build up a "wire edge" of thin and brittle waste material that must be removed. To do this, hold the face of the scraper at 90° to the stone or sandpaper and work the edge using light pressure. It's easier to maintain the 90° angle if you skew the scraper. After a few strokes, the wire edge should fall off. If not, give the faces of the scraper a few passes across the sandpaper.

Draw and turn the burr

To create a tough burr for cutting wood, you need a burnisher—a rod of highly polished steel that is harder than the soft steel in the scraper. I've owned several commercially made burnishers over the years and they all worked fine. My favorite now is an old screwdriver.

Creating a burr begins with the scraper flat on the edge of the bench. Hold the burnisher flat against the face while pushing it away from you for several strokes along the length of the edge. Concentrate downward pressure on the cutting edge to draw out the burr. Some woodworkers like to angle the burnisher down on the edge, but this angle should be very slight, only a degree or so. Work until you feel a slight burr when you carefully touch the edge with your fingertip. Draw the burr along each of the scraper's four long edges.

Now clamp the scraper upright in a bench vise with the edge to be burnished parallel to the benchtop. You can turn the burr with the burnisher held freehand or, to ensure a consistent angle, let the handle of the burnisher ride on the benchtop during each stroke. Following this second approach means that adjusting the scraper's height in the vise will alter the burnishing angle and, as a result, the cutting angle of the finished burr. The steeper the angle, the more aggressive the cut, but any angle between 1° and 15° works well.

Remove the wire edge. *A few light strokes on edge should accomplish this. Skewing the scraper to the direction of cut helps keep it square to the sanding surface. This also hones the edge, removing any rough file marks.*

RAISING A BURR

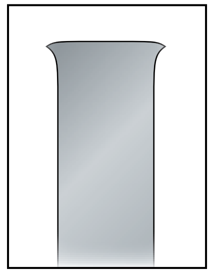

Burnishing each edge forces the metal into a hook shape, creating a cutting burr.

1 ***Draw the burr.*** *Apply firm downward pressure with the burnishing rod at the scraper's edge. Take several strokes, always pushing away from you. Skew the burnisher to help force material past the edge of the scraper.*

Drawing the burnishing rod over the flat face at a very slight angle extends the corner of the edge out into a ridge.

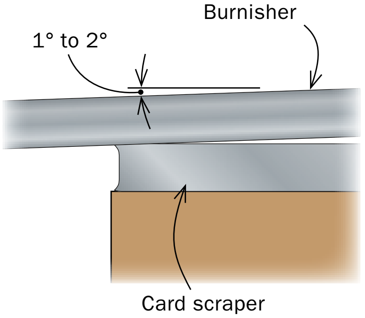

2 ***Turn the burr.*** *Use a piece of scrap as a reference to set the scraper's edge at a consistent height. Then ride the burnisher's handle along the bench to maintain a consistent angle, and make several firm pushing strokes away from you.*

Use the burnisher at an angle of 1° to 15° to flatten this ridge and create a hook-shaped cutting burr. A steeper angle yields a more aggressive cut.

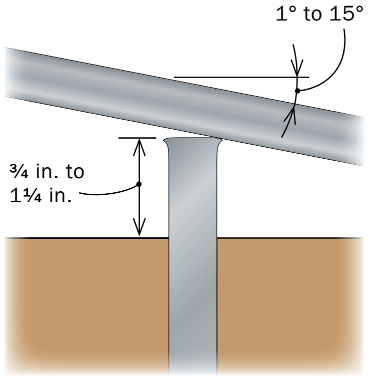

Turning the burr should take only two or three passes. Once you feel a turned burr along the entire edge, test the cut. If you're making only dust, burnish some more. Once you're making shavings with both sides, you're ready to start scraping.

Two ways to take a shaving

A scraper can either be pushed or pulled. I usually push the scraper to make aggressive, slightly concave cuts when removing tearout or smoothing tricky grain. For finer cuts, I pull the scraper to flatten any dished areas and leave a surface ready for finishing.

To push the scraper, hold it with your fingers on the short edges and your thumbs together in the middle of the back, about ½ in. or so above the cutting edge. Use your thumbs to create a slight bow along the bottom edge. The deeper the bow, the more aggressive the cut. Conventional wisdom says to start by holding the scraper vertically and angling it forward until you feel the burr bite into the wood. It works, but in my experience, it's easier for beginners to start with the scraper held at about 60° and, while pushing, slowly increase the angle until the burr begins to cut the wood. Then push forward in one smooth motion to get continuous, paper-thin shavings.

To pull the scraper, place your fingers on the far side and your thumbs on the face closest to you. Unlike when pushing, your thumbs should be positioned higher on the face of the scraper and your fingers lower. A pulled scraper is held with the edge bowed only enough to prevent the corners from digging into the wood. Some woodworkers avoid this problem by rounding the corners with a file or grinder.

A scraped surface that's finish ready

In my shop, a card scraper touches virtually every surface of a project, and is almost always the last tool to do so before the finish goes on. If I'm working easily planed, straight-grained

Making shavings

TIP

An inexpensive heat shield. *A flat refrigerator magnet helps protect your thumbs from the heat generated in use.*

stock, I typically clean up jointer and planer marks on larger surfaces with a handplane, then use the scraper to remove plane tracks and clean up tearout. To ensure a uniform appearance under a finish, I give all the surfaces at least a light scraping. In general, I scrape the entire surface using a push stroke, then flatten the slightly dished area using a pull stroke.

For stock with trickier grain, such as bird's-eye or burl, I skip handplaning altogether. A scraper is much easier to control than a handplane, and there is almost no chance of tearout.

In any case, if the milling marks are especially heavy, I usually start by power sanding to 120 grit. I prefer the way a scraped surface looks under a finish, so at this point I thoroughly brush or vacuum away the sanding dust and scrape until the entire surface is uniform.

Two thumbs down. *Grasp the scraper with your fingers wrapped around each side and your thumbs together on the back, near the bottom edge. Push forward with your thumbs, applying enough pressure to create a slight bow. The more pronounced the bow, the more aggressive the cut.*

Restore the edge

A dull scraper takes more effort to push and a steeper cutting angle. It also creates dust instead of wide shavings.

Fortunately, it's possible to restore the burr several times simply by reburnishing the face and then the edge in the same way you initially turned the burr. After four to six burnishings, the metal becomes brittle and you need a new surface. Return the scraper to the vise and start over with a file, removing any nicks along the edge that you've created by scraping. Then burnish the faces and edges to draw and turn new burrs.

Because each tune-up removes so little steel, I still use the first scraper I bought a dozen years ago. Sandpaper, however, usually wears out in minutes. □

Pulling leaves a flatter surface. *Align your fingertips behind the cutting edge to apply uniform pressure.*

Use caution near edges. *Avoid letting the scraper dig into the workpiece edges and leave them ragged. Here, Teague bows the scraper enough to concentrate cutting pressure in the center of the workpiece.*

READER SERVICE NO. 62

READER SERVICE NO. 53

READER SERVICE NO. 93

READER SERVICE NO. 7

READER SERVICE NO. 43

READER SERVICE NO. 52

READER SERVICE NO. 111

WOOD MOISTURE METER

- mini-Ligno E/D -
For any hobbyist or woodworker because frustrating moisture problems can be avoided.

800-227-2105
Lignomat USA
503-257-8957
FAX 503-255-1430,
PO Box 30145,
Portland OR 97294
www.lignomat.com,
sales@lignomat.com

READER SERVICE NO. 32

Inside Passage School of Fine Woodworking

A school founded on the teachings of James Krenov

Nine-Month Craftsman Program
One to Six-Week Artisan Programs

Weekly Lectures by James Krenov

Located on the Sunshine Coast of British Columbia

www.insidepassage.ca 1 877 943 9663

READER SERVICE NO. 107

THE SOURCE FOR BANDSAW ACCESSORIES

Iturra Design : New 2008 Catalog

Free Catalog

- Introducing the **Quick Release** by Carter Products
- Our new **Blade Gage** bandsaw blade tension meter.
- **Lenox Pro Master** carbide-tipped and Bimetal blades
- **Bandrollers**, rip and re-saw fences, improved tension springs, tires, table inserts, circle jigs, and much more.
- History and comparison between **Delta** and **JET** bandsaws.

CALL 1-866-883-8064 or 1-904-371-3998

READER SERVICE NO. 17

est. 1978
HIGHLAND Woodworking
fine tools & education

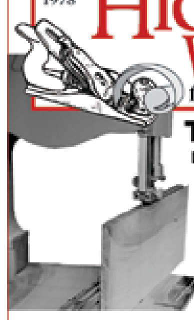

The Wood Slicer®
LEGENDARY RESAWING BLADE
- CUTS SMOOTHER
- STAYS SHARP LONGER
- WORKS FASTER
- SOUNDS QUIETER
- MAKES VENEERS

"Best All-Around Performer"
Rated by Fine Woodworking

800-241-6748
highlandwoodworking.com

READER SERVICE NO. 68

4-WAY MONEY MAKER!
Molds • Planes • Sands • Saws

12", 18" and 25" Models Available

FREE 30-Day TRIAL!

Now, turn a $5.00 rough board into $75.00 worth of trim in just minutes! Make over 500 standard patterns, curved molding, tongue & groove, any custom design. **QUICKLY CONVERTS** from Molder/ Planer to Drum Sander or power-feed Multi-Blade Rip Saw!

Variable Feed Makes the Difference!
Just a twist of the dial adjusts the Woodmaster from 70 to over 1,000 cuts per inch. Produces a glass-smooth finish on tricky grain patterns no other molder/planer can handle. Plenty of American-made "muscle" to handle money-saving, "straight-from-the-sawmill" lumber. 5-Year Warranty.

Prouder than ever to be MADE IN AMERICA!
Call Today for FREE FACTS!
800-821-6651 EXT. PJ42
Woodmaster Tools, 1431 N. Topping Ave., Kansas City, MO 64120

READER SERVICE NO. 8

Power Your Dreams

☑ Sliding Tablesaw ☑ Shaper ☑ Jointer ☑ Planer ☑ Mortiser

You dream big, but your shop is small. Our combination machines let you pack the power of an entire pro shop into any woodworking space.

Call us to see what a combination machine can do for your shop.

Mini Max USA
toll free
866-975-9663
www.minimax-usa.com

READER SERVICE NO. 116

The facts are hard to ignore.
Titebond® III outperforms polyurethane glues.

As the leader in wood glues, we want you to know the truth about polyurethane glue and woodworking. A straightforward comparison between Titebond® III Ultimate Wood Glue and polyurethane glue tells the story.

Titebond® III is THE ultimate choice for bonding wood to wood. Period.

Proud Sponsor Of THE NEW YANKEE WORKSHOP

For more information and a detailed comparison, please visit www.titebond.com/TBIIIvsPolyurethane

Made in the USA

READER SERVICE NO. 50

A Trip to the Dovetail Doctor

Frustrated reader goes one-on-one with our expert

BY STEVE SCOTT

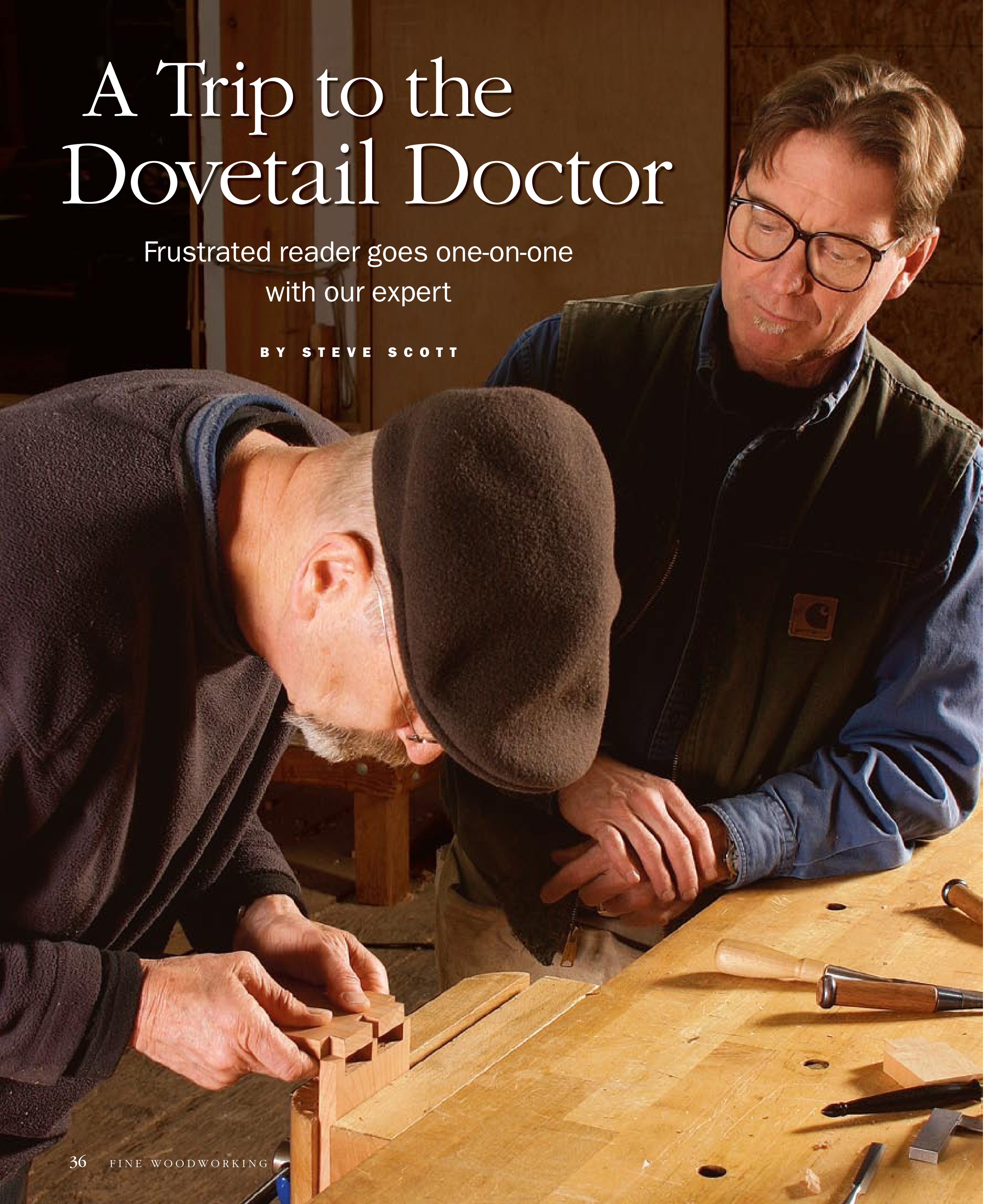

Earlier this year, a frustrated woodworker sent us a note that was both challenging and matter-of-fact. His subject was dovetails. "I've read most of the stuff *Fine Woodworking* has published and seen several videos (offering dovetail instruction)," he wrote. "I still can't do 'em."

The reader, Tom Rawson of Oakland, Calif., said he had also taken a local woodworking class and practiced dovetails diligently for months afterward. The results? "I tried. I focused. I failed."

The problem as Rawson sees it is that even the most thorough instruction tends to gloss over the basic mechanics. He proposed an article to address those details, and as a way of getting at them he suggested something we had never tried. What if we arranged for a struggling woodworker like him to have a one-on-one tutorial with an expert? The student could explain his difficulties to the expert, who would teach him the nuances he'd been missing. We'd be there to capture the action in photos and in video.

We arranged for Rawson to spend a couple of days working on through-dovetails with contributing editor Gary Rogowski at Rogowski's school, the Northwest Woodworking Studio in Portland, Ore. When he arrived in Portland in April, Rawson brought with him a host of frustrations and preconceptions, but a willingness to drop them all in pursuit of better dovetails. Meanwhile, Rogowski worried that he wouldn't be able to identify any problems or that his student would lack the hand-eye coordination to follow through—that after two days he would have to politely suggest that Rawson outsource all his dovetails or sell his woodworking tools and take up crossword puzzles.

Exam reveals a host of ailments, cures

He needn't have worried. Almost from the moment Rawson began working, Rogowski began spotting problems, small and large. At every important stage—layout, sawing, chopping away waste,

KEEP LAYOUT AT ARM'S LENGTH

Scribing a clean, deep baseline is more of a challenge if you're clutching the workpiece to your chest. Rogowski suggested that Rawson hold the work on the bench for greater stability and a much cleaner line.

BEFORE

AFTER

KEY TO STRAIGHT SAWCUTS

Rawson's white-knuckle pistol grip on the backsaw caused the saw to bind and drift. Rogowski encouraged him to use a one-handed grip and "let the saw do the work."

BEFORE

AFTER

BETTER ANGLE ON CHOPPING

When chopping waste, Rawson's stance at the end of the workpiece meant he couldn't tell if the chisel was square to the work. Rogowski had him reorient so that he had a side view of the chisel.

BEFORE

AFTER

paring and fitting the joint—Rogowski was able to give Rawson critical pointers. Here are the tips that helped the most.

Good dovetails start with good layout—The first step in dovetailing is to scribe a baseline matching the thickness of the stock on the end of both workpieces. Rogowski quickly spotted a problem. Rawson was holding the workpiece against his chest while drawing the marking gauge across the work. Rogowski suggested holding the workpiece flat on the bench instead, allowing him to use his hands more effectively. This resulted in a crisper, deeper line.

It's a saw, not a pistol—Rawson's troubles with the backsaw stemmed mainly from his grip: a locked-down, two-fisted clench that looked to Rogowski "like he was shooting a .45." This was causing the saw to wander and to bind in the kerf.

"You've got to give up that other hand and let the saw do the work," Rogowski told him, demonstrating a light but firm one-handed grip with the index finger extended.

As that first morning progressed, Rawson got more comfortable with the new grip and his sawing became more fluid and less labored. He described the switch as "kind of a breakthrough."

Online Extra

For a video of Rawson's day with Rogowski, go to **FineWoodworking.com/extras.**

Rogowski also suggested simple practice drills in pine for sawing on a line. And he showed Rawson how to start a cut cleanly by setting the saw's teeth on the opposite corner of the stock and gently pulling toward him.

Square or not depends on your point of view—To chop out the waste between tails, Rawson positioned himself at the end of the bench, facing the end of the workpiece.

"OK, now wait a second. Stop right there," Rogowski said. "How do you know you're chopping square?"

Rawson paused, mallet frozen mid-swing, "I guess I don't."

Rogowski moved Rawson to the side of the bench so he could see the chisel in profile and gauge whether it was straight up and down before striking it. He also showed Rawson a trick for finding the baseline with the chisel edge by lightly dragging the edge, bevel down, until it snaps into the line. The results were encouraging. "It certainly feels like things are possible here that haven't felt possible before," Rawson said.

A problem at the end of the tails—When sawing the shoulders on the ends of the tail board, where the half-pins go, it's easy to cut or pare past the scribed baseline. Rogowski demonstrated a simple way to avoid that risk. Before sawing, he uses a chisel to cut a V-groove that meets the baseline. This makes it easy to locate the sawkerf and maintain a straight cut. The sawcut stays a bit shy of the line, leaving a small ledge of material to be pared away.

A clean transfer is critical—The mating pins are laid out by scribing the outline of the finished tails onto the pin board. Rogowski showed Rawson a couple of ways to help ensure accuracy. First, he used a small square to check that the tails were square front to back, making corrections with a sharp chisel before transferring the layout. He also took care to align the two workpieces precisely during the transfer, using a wide, flat scrap as a straightedge.

Fit the joint in stages—Paring for a final fit "makes my blood run cold," Rawson told me. "If things were askew from the saw, what makes me think they're gonna get better with a chisel? Seems like the errors compound." As an antidote, Rogowski told Rawson to pare and fit each mating surface in turn, working from one side of the board to the other. He demonstrated how to identify where the pins need paring by blackening the edges of the tails with a pencil so they mark the tight spots when test-fitting the joint.

The patient takes home a prescription

Beyond the specific tips, Rogowski encouraged Rawson to continue practicing regularly, and to set aside the 1-in.-thick birch he'd been practicing on in favor of friendlier material like poplar.

Fitting a snug set of tails at the end of the second day, Rawson was tired but excited and newly confident.

"This is where I never thought I would be," he said.

The good doctor, meanwhile, was relieved that he'd been able to help. "It was good," Rogowski said. "It felt good." □

Steve Scott is an associate editor.

V-GROOVE FOR SQUARE SHOULDERS

Before sawing the shoulders at each end of the tail board, Rogowski cuts a V-groove that meets the baseline. This makes it easier to locate the sawkerf and pare a perfect shoulder. He saws shy of the baseline, leaving a small ledge of material to be pared away precisely.

ALIGN THE PARTS FOR A CLEAN TRANSFER

Rogowski suggested resting the tail board on a handplane with the pin board clamped in a vise. He uses a knife to mark the pin locations, then pencils in the lines to make them more visible.

SNEAK UP ON THE FIT

When a chisel is placed in the baseline too early, all the waste wood in front of it pushes the chisel backward, past the line. Rogowski emphasized chopping out the bulk of the waste first (left) and then paring right to the line (right).

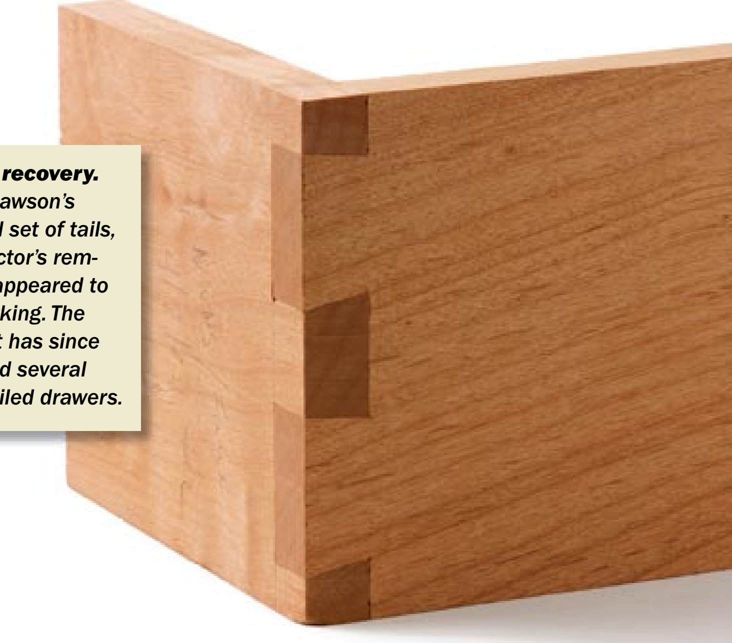

Rapid recovery. *With Rawson's second set of tails, the doctor's remedies appeared to be working. The patient has since finished several dovetailed drawers.*

Photos: Steve Scott

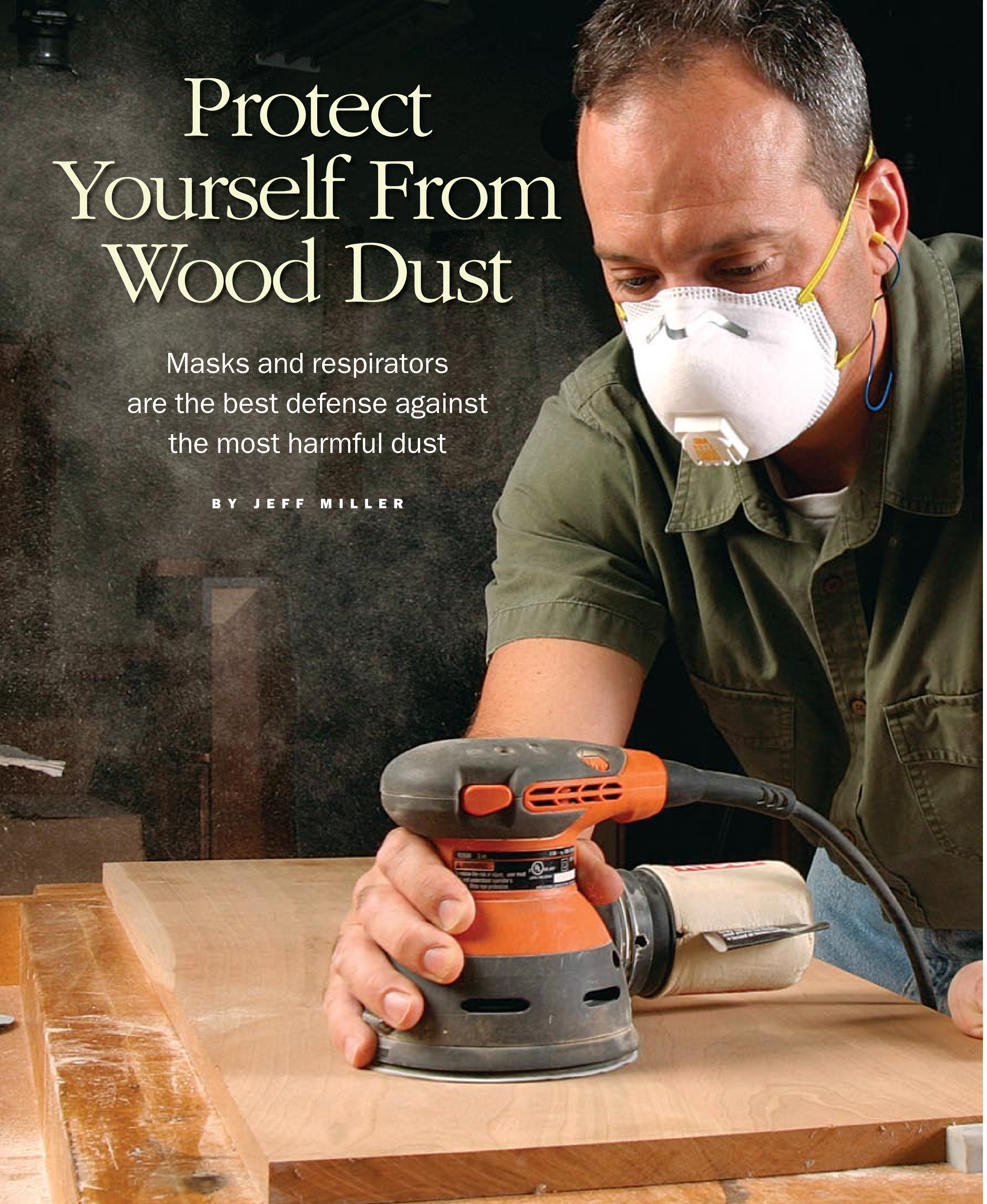

Protect Yourself From Wood Dust

Masks and respirators are the best defense against the most harmful dust

BY JEFF MILLER

Which one is right for you?

For most people, a high-quality dust mask works great. A powered respirator is a better choice if you need protection from flying chips, or if you have facial hair, which keeps a dust mask from working properly. Most respirators have integrated, safety-rated face shields.

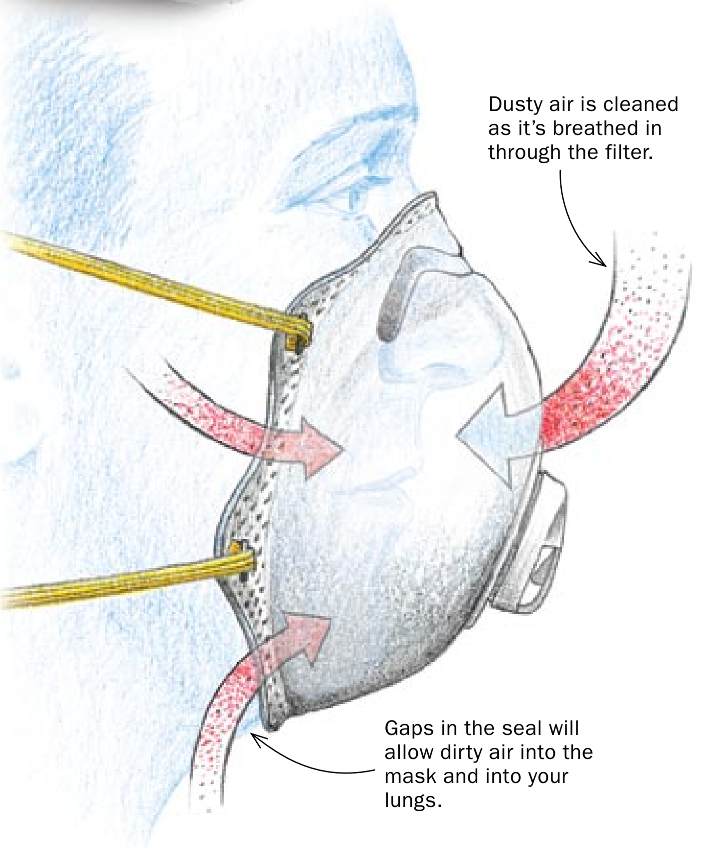

DUST MASKS REQUIRE A TIGHT FIT

A dust mask should seal tightly against your face. That keeps bad air from seeping in.

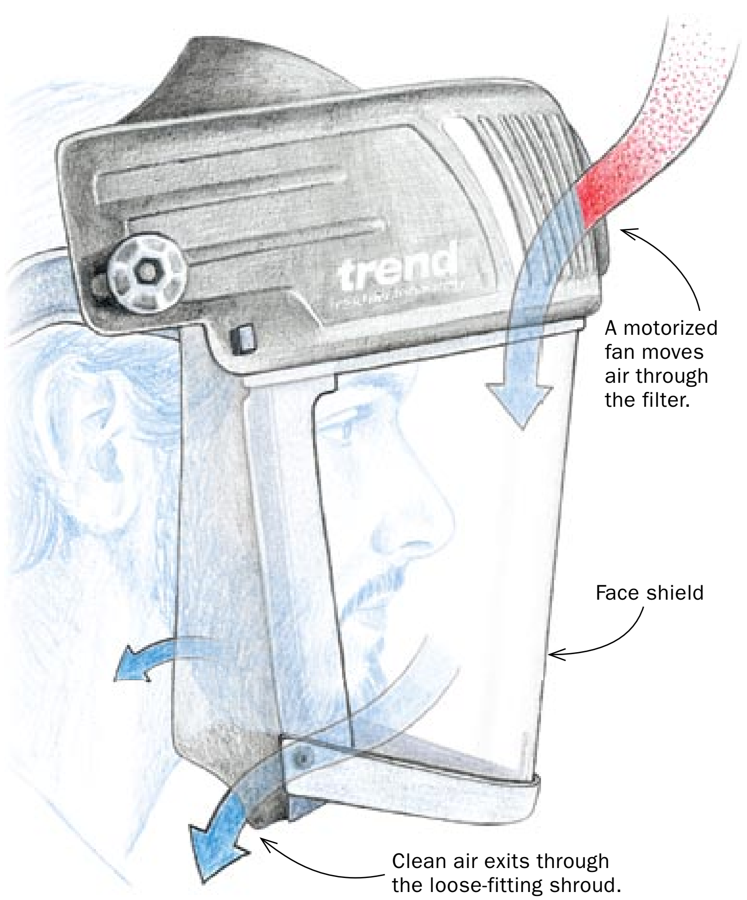

POWERED RESPIRATORS USE POSITIVE PRESSURE

Respirators use a fan to pull dirty air through a filter. The clean air flows down over the face, preventing bad air from flowing into the mask.

Wood dust is a woodworker's constant companion and a constant threat. It doesn't take much airborne dust to exceed the exposure limits recommended by the National Institute for Occupational Safety and Health. In fact, you'll quickly blow past them when machining or sanding wood. Dust collectors and air cleaners help control wood dust, but even when optimized for your shop they don't catch it all. The smallest and most dangerous particles escape them.

Exposure to those minute particles can cause nasal and sinus-cavity irritation, allergies, lung congestion, chronic cough, and cancer. That's why it's important to wear a dust mask or a powered respirator whenever you're producing dust, or working in the shop afterward.

You're more likely to wear a dust mask or respirator if it's comfortable and fits well. You might need to look beyond your local hardware store, but great choices are out there. In fact, there are so many

Filters for wood dust

For protection from wood dust, look for a mask rated N95, N99, or N100. The ratings don't apply to powered respirators, but all the respirators tested clean the air as well as an N95 mask.

Dust masks

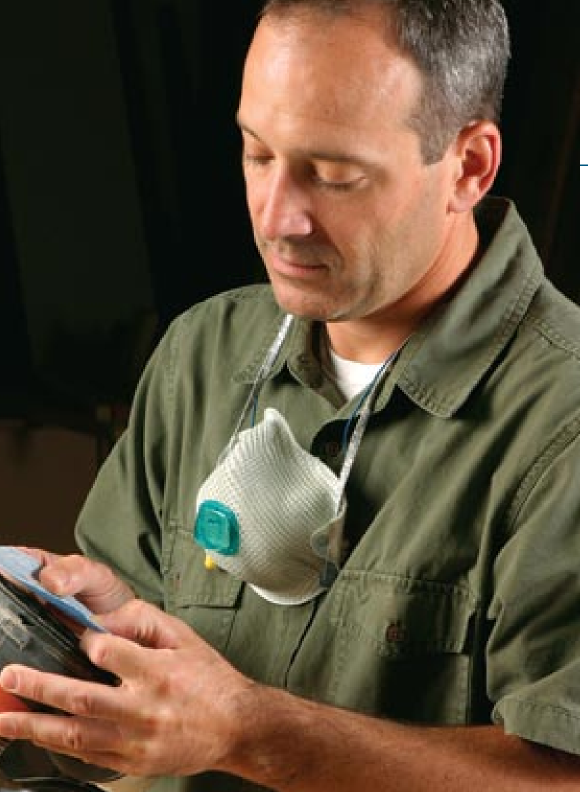

GET A VENT

Our testers clearly favored vented masks because they are more comfortable. They allow hot air to easily escape through the front of the mask, so your face stays cooler and your glasses won't fog.

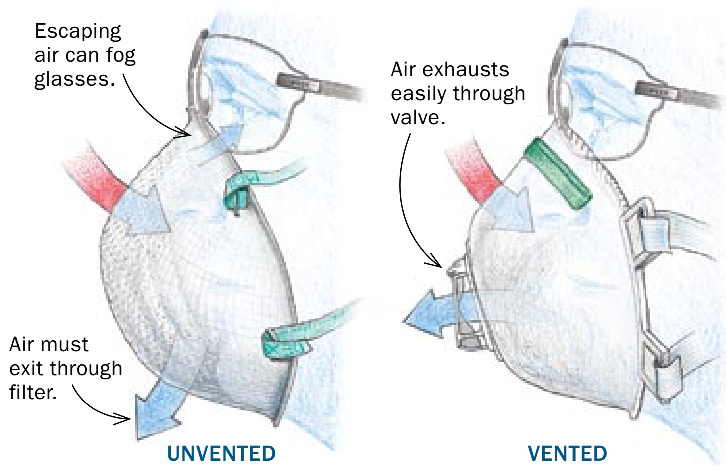

NORTH CFR-1 COM-FIT
www.labsafety.com
$12 for mask and one filter;
$15 for 20 replacement filters

REUSABLE MASKS: A GOOD ALTERNATIVE FOR SOME

Disposable masks and those with replaceable filters clean air in the same way. The difference shows up when it's time to replace the filter. With a reusable mask, you replace just the filter section, and keep the "frame" that holds it. Although they cost more up front, their filters last longer and are less expensive. They are heavier and can be less comfortable than disposables, but if you find one that fits you well, a reusable mask could be a good option.

HALF MASK DUST RESPIRATOR
www.leevalley.com
$32 for mask and 6 filters;
$10 for 5 replacement filters

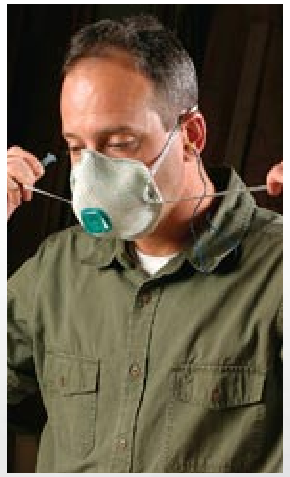

A place to hang your mask. *The Moldex Handy Strap makes hanging a mask around your neck a snap (above), a big plus when you need to take it off momentarily to speak, get a drink, or make an adjustment. The strap makes putting the mask on easier, too (right).*

A better fit for more noses. *Masks with adjustable nosepieces work for more people because they can be tailored to the individual's nose. The nosepieces help prevent fogging by giving a better seal around the nose.*

options you might feel overwhelmed. But that won't happen if you know how dust masks and respirators work, how to tell if one fits you well, and which features make one more comfortable.

I recently tested a large selection of masks and respirators, and had the editors at *Fine Woodworking* do the same. I'll tell you what we liked about them and what we didn't. That will help you know where to begin your search for a good-fitting and effective dust mask or respirator.

After all of our testing, it's clear that there are a few key features that make for a great mask or respirator. You should put them at the top of your list before you shop.

Comfort and fit matter most

An exhaust valve is an indispensable feature on a dust mask. In fact, we recommend you steer clear of any dust mask that doesn't have one. Exhaust valves clear the warm air you exhale, prevent safety glasses from fogging, and help keep your face cooler.

You also should look for a mask that is made from face-friendly material. The interior of the 3M 8511, for example, is soft and fleece-like. An adjustable nosepiece is important, because it allows the mask to form a tighter seal against your face and allows you to customize the mask to the shape of your nose.

Adjustable straps are a big plus, because they make for a tighter fit. Testers liked the adjustability of the straps on the Willson Saf-T-Fit Plus, and applauded the versatility of the Moldex Handy Strap, which allows you to hang the mask comfortably around your neck.

Some features don't reveal themselves until you have a mask on. You don't want a mask that interferes with your vision or safety glasses, prevents you from speaking audibly, or interferes with hearing protection.

Because they have nearly all of these features, two masks really stood out from the rest: the 3M 8511 and the Willson Saf-T-Fit.

Respirators are harder to peg than dust masks, but there are a few key features to look for. The weight and balance of the helmet, for example, are important. If a respirator doesn't sit well on your head, you'll take it off very

3M 9211
www.masksnmore.com
5 for $8.25

MOLDEX N95 WITH EXHAUST VALVE
www.leevalley.com
5 for $20

MOLDEX EZ-ON WITH EXHAUST VALVE
www.labsafety.com
10 for $28

MOLDEX N100 WITH HANDY STRAP
www.labsafety.com
5 for $34

Our favorites

WILLSON SAF-T-FIT
www.labsafety.com
10 for $28

This mask just about has it all. It's made from a comfortable material and has an exhaust valve, adjustable straps, an adjustable nosepiece, and a foam gasket that seals tightly against your face.

3M 8511
www.labsafety.com
(No. 38025); 10 for $21

This is another great mask, even though it doesn't have adjustable straps. It has an exhaust valve, the inner lining is soft, and the nosepiece is adjustable. Two testers picked this as their favorite.

Photos: Matt Kenney; drawings: John Tetreault

Protection from the big stuff, too. *Many respirators have an integrated safety-rated face shield, which makes them great for turners.*

quickly. And the face shield shouldn't distort or interfere with your vision. You also should be able to wear some kind of hearing protection with the respirator on.

Of the respirators we tested, the Trend Airshield and Airshield Pro distinguished themselves for comfort, clarity of vision, and overall user-friendliness.

Keep the clean air flowing

Dust masks don't last forever. Replace yours when it becomes difficult to breathe through, when the mask no longer seals properly, or when it is damaged.

If you use a respirator, make sure to check its airflow regularly. When it doesn't move enough clean air, it's time to replace the batteries, the filter, or both. □

Jeff Miller designs and builds furniture, and teaches at his studio, J. Miller Handcrafted Furniture, in Chicago.

Powered respirators

If you've got a beard, a respirator is the way to go. And if you turn, you can find one with a safety-rated face shield for added protection.

TRITON POWERED RESPIRATOR
www.woodcraft.com
$200

In addition to being a respirator, the Triton provides a full-face shield, a helmet, and integral hearing protection. A belt pack holds the fan, filter, and batteries. The fan and filter are connected to the helmet by a hose. It's great for rough work, but the face shield distorts your vision.

AIRCAP2
www.woodcraft.com
$205

The filters and a fan are perched on the cap of this lightweight respirator. The face shield is not a safety device.

POWER AIR RESPIRATOR
www.rockler.com
$70

This respirator resembles a reusable dust mask, but it's heavier because the filter, fan, and motor are on the mask. The batteries go in a belt pack. Everyone who tested this one found it uncomfortable.

Our favorites

TREND AIRSHIELD
www.envirosafetyproducts.com
$240

Testers found the Airshield comfortable because of its padded headband. And even though the fan, motor, filter, and battery are perched on your brow, its weight is reasonably well balanced.

TREND AIRSHIELD PRO
www.envirosafety products.com
$366

The filter, fan, motor, and battery are located on the top of this respirator, so its weight is very well balanced. The optional earmuffs work well once you get everything adjusted. It provides the best filtration of all the powered respirators tested.

Illustrated Guide to Drawers

The ideal drawer? That depends. Here's how to choose

BY MATTHEW TEAGUE

Whether it's a tiny drawer in a jewelry box or the wide, deep drawer of a dresser, all drawers are little more than a box that slides into an opening. But there are nearly endless combinations of construction methods that can be used to build that box. By understanding the various ways in which drawers are made, you'll be able to choose the best construction method for your project, with the ideal blend of beauty, strength, and efficiency.

Drawers can be made of solid wood, plywood, or both. Drawer fronts often become the focal points of a piece, showing off spectacular figure, molded edges, or a handsome pull. The actual drawer front can be integral to the drawer (see pp. 46-47), meaning that it is joined directly to the drawer sides, or it can be attached to a fully constructed drawer box (called a false front; see pp. 48-49). Joinery options at both the back and front can range from simple butt joints to classic hand-cut dovetails. Drawer bottoms can be made from solid wood or plywood.

To size a drawer correctly, you need to know not only the size of the opening, but also the depth of the inset. Drawers can be designed flush to, recessed into, or overlapping the front of the case.

Different styles of furniture call for different types of drawers. While a plywood drawer with a false front makes sense in a shop cabinet, it would be quite out of place in a high-style 18th-century reproduction. The joinery and materials you choose should fit the type of furniture you want to build. So should the way the drawer will slide in and out of its pocket. So let's start there.

Drawer slides influence design and construction

Like all drawer decisions, drawer-slide options range from simple and efficient to finely handcrafted. Traditionally,

OPTIONS ABOUND—FROM SIMPLE TO REFINED

There are a number of great ways to build a drawer. A utility or light-duty drawer might be a simple plywood box with a false front (top) and a plywood bottom. A pinned rabbet offers a simple yet stylish way to build a drawer with an integral front (second from top). Another step up is a drawer made with sliding dovetails and a solid-wood bottom (third from top). The holy grail of drawers (bottom) has hand-cut half-blind dovetails at the front, through-dovetails at the back, and an elegant raised-panel, solid-wood bottom.

Integral-front drawers

A traditional drawer is built with the front joined directly to the sides. This is the most lightweight and attractive design overall. Aim for drawer sides that are half to one-third the thickness of the front. Once the drawer has been assembled, the sides often must be planed or sanded carefully so the drawer fits in the opening. In most of these examples, the joinery is hidden from the front for a clean look.

the sides of a wooden drawer slide directly on a wooden frame within the case. Most drawers with integral fronts work well with this design because the drawer is sized and constructed to fit the opening.

Manufactured drawer slides have long been common on kitchen cabinets, but they're being used more and more on high-end furniture today. Although frowned upon by some purists, contemporary slide designs install quickly and painlessly, and it's difficult to find fault with their smooth action, soft-close mechanisms, and full-extension capability. These slides can be side- or bottom-mounted, and are perfect for use with false-front drawers or drawers with sliding dovetails.

Each type of commercial slide has its own drawer requirements, so you'll have to build the drawer to accommodate the slides. For instance, side-mounted slides typically require ½ in. of space on both sides of the drawer box. If you're using commercial slides, it's a good idea to have them on hand before you build either the case or the drawers.

Front joints are the critical ones

Regardless of whether a drawer has an integral front or a false front, most pulling and racking stresses on a drawer box occur at the front corners; after all, a drawer is opened and closed by pulling and pushing on the front. Any action that isn't straight in or out of the drawer pocket also causes racking stress, which hits the front-corner joints hardest.

For these reasons, front-corner joints should be as strong as possible and have some mechanical reinforcement. This mechanical connection can be as simple as pegs or pins in a rabbet joint, or it can

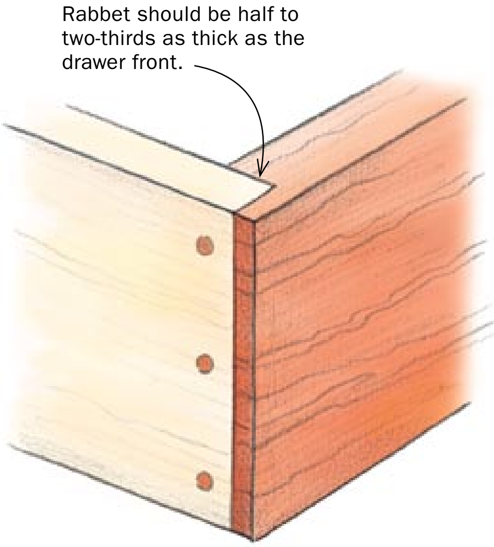

PINNED RABBET

The rabbet is easy to make, but it's not very strong. It should be reinforced with some kind of fastener, such as recessed screws, cut copper nails, or wooden dowels or pegs, which offer a clean, handmade look. With this style of construction, the back of the drawer usually is set into simple dadoes in the drawer sides.

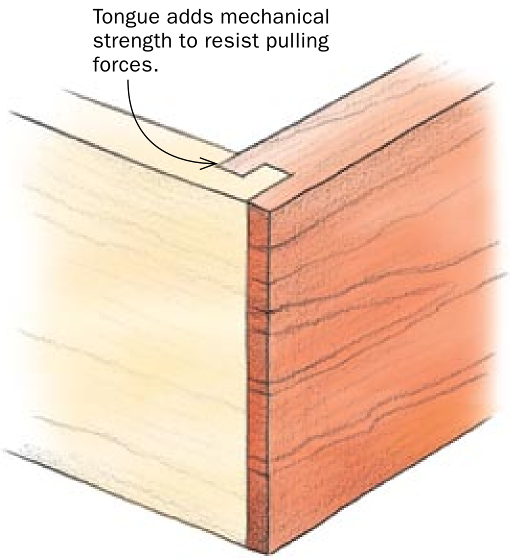

TONGUE AND RABBET

Although it takes a few more tool setups, a half-blind tongue and rabbet adds built-in mechanical strength (beyond glue alone) to the joint. Dado or dadoed rabbet joints are suitable options for the back of the drawer.

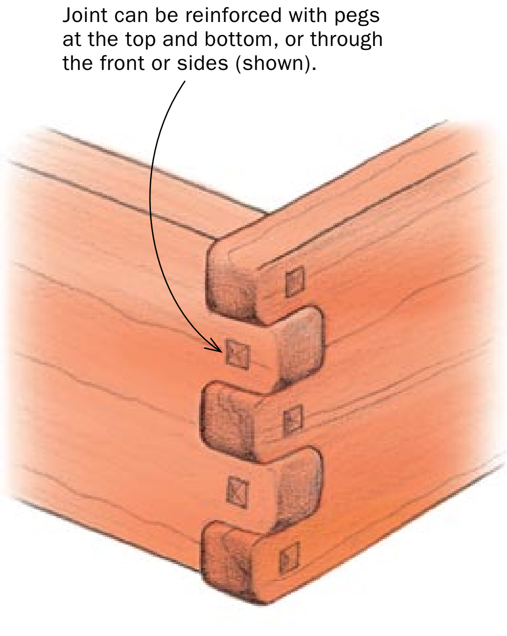

BOX JOINT

The box joint is the beefier, more handsome cousin of the finger joint (see p. 48), and it's quite comfortable at the front of a piece of furniture. The design seen here, reminiscent of Greene-and-Greene construction, features wide fingers with rounded corners. Square, pillowed pegs reinforce the joint and add visual interest. If you're using box joints at the front of a drawer, it's efficient to use them at the back, too, though the fingers should not protrude.

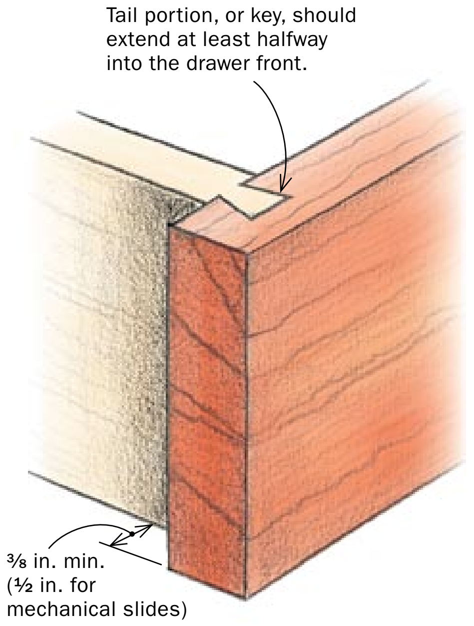

SLIDING DOVETAIL

The sliding dovetail has built-in mechanical strength to keep it together. It offers a quick, strong joinery option, but requires the drawer front to overhang the sides a bit. So it usually is used either on drawers designed with overlay fronts or on flush drawers that ride on mechanical slides or are fitted between wood guides in the case.

AT THE BACK

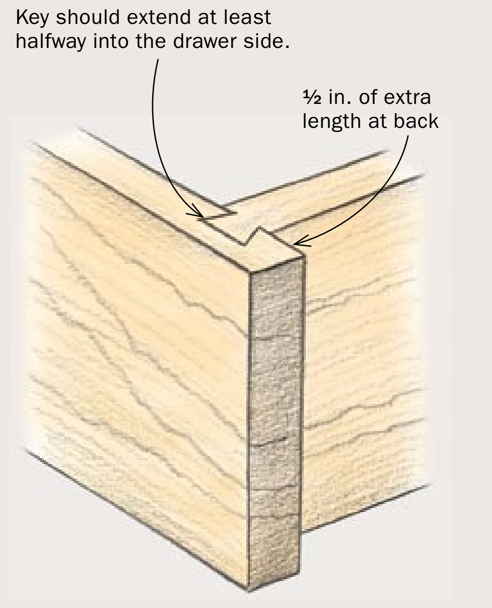

REAR JOINT FOR SLIDING-DOVETAIL DRAWERS

If you're using sliding dovetails to join the front of the drawer, it's efficient to use the same joints to attach the back. Leaving the sides long at the back will give you access to the full depth of the drawer when it's open.

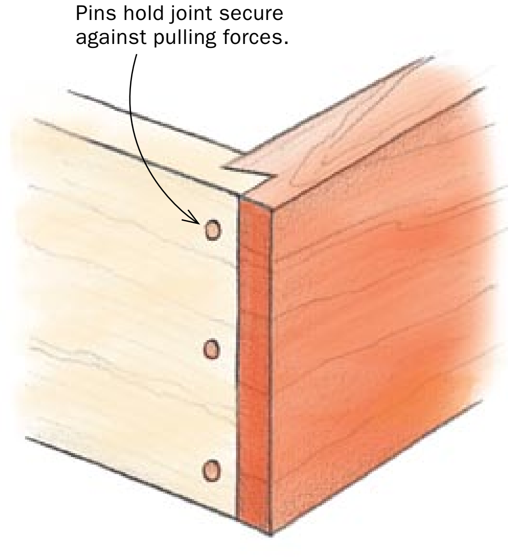

DOVETAILED RABBET

A dovetailed rabbet is stronger and more attractive than a simple rabbet joint. This type of corner joint also should be reinforced with pegs, brads, or some kind of mechanical fastener. The rear joints can be rabbeted dadoes (right) or sliding dovetail joints.

AT THE BACK

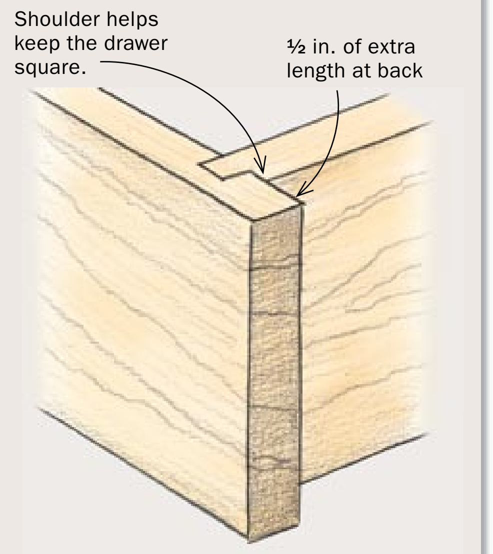

REAR JOINT FOR RABBETED DRAWERS

A rabbeted dado is an easy and effective means of attaching the back to the sides, plus it helps keep the drawer square. Leaving the sides long at the back allows the drawer to be pulled out farther, providing better access.

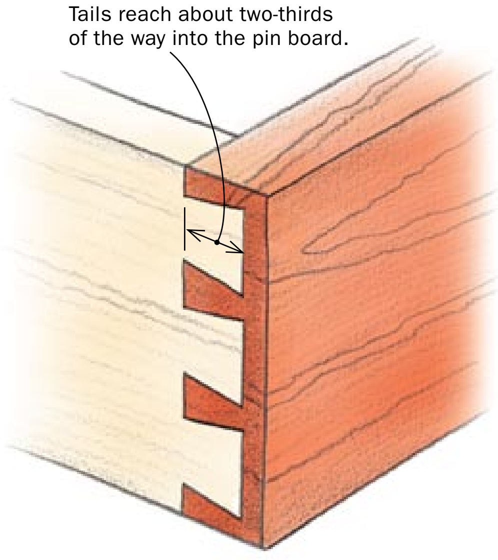

HALF-BLIND DOVETAIL

Many regard the half-blind version as the king of dovetail joints because of its attractiveness and superior strength. To highlight the craftsmanship, many furniture makers use contrasting woods on the front and sides. Through-dovetails are easier to cut than half-blinds, so the former are the usual choice for the rear corners.

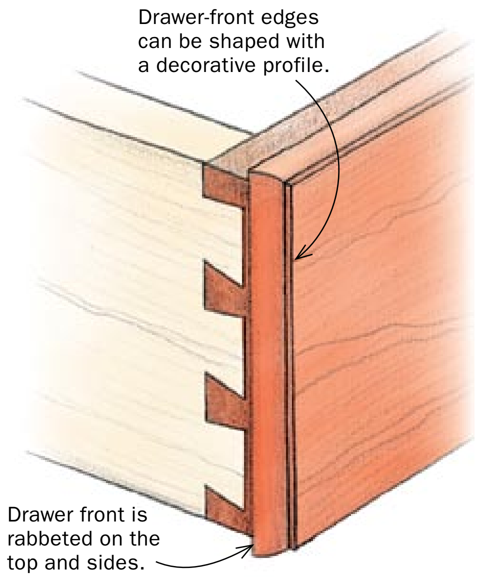

LIPPED HALF-BLIND DOVETAIL

For overlay drawers with excellent strength, use lipped half-blind dovetails. With this joint, the front is rabbeted and joined to the sides with dovetails. Again, through-dovetails are a good option for the rear-corner joints.

AT THE BACK

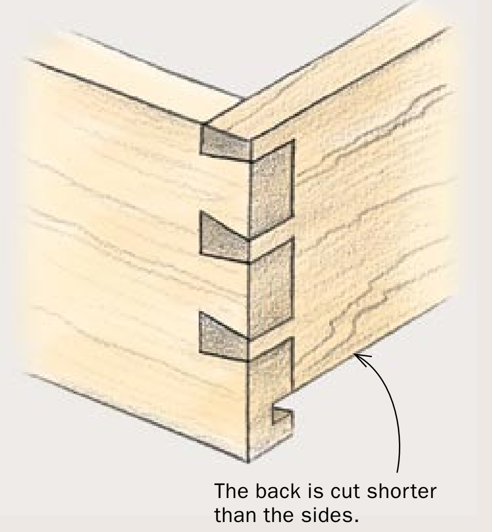

REAR JOINT FOR DOVETAILED DRAWERS

In traditional dovetailed drawer designs (left), you'll often see through-dovetails at the back. The combination of dovetails at front and back creates a sturdy drawer that will last a lifetime. The pin board typically is cut shorter than the sides to allow the drawer bottom to be slid in after the rest of the box is assembled.

Photos and drawings: John Tetreault

Drawers with false fronts

Using false fronts allows you to separate drawer construction from drawer fitting, which ultimately makes both processes easier. With this method, the drawer box is glued up and installed in its opening. Then the false front is cut to size, applied to the box temporarily, adjusted for a perfect reveal (the gap between the drawer and the case), and then permanently attached to the box. These drawers are ideal for use with manufactured slides, which typically require ½ in. of space on each side of the drawer box.

be the interlocking strength of the classic half-blind dovetail.

While it's also important to have a sound mechanical joint at the back of the drawer, aesthetics are less of a concern because these corners are rarely seen. For these reasons, rear-corner joints often are different from the front-corner joints. If you are using a machine setup to cut the front joinery, however, it makes sense to use those same setups to cut the back joinery.

Drawer bottoms: fancy or functional

The choice of material and the design of the drawer bottom depend on the style of drawer you are building, whether it's a quick-and-dirty shop drawer or a drawer for an 18th-century secretary.

Both solid wood and plywood are commonly used for drawer bottoms. Solid wood is the traditional choice, and aesthetically, it's hard to beat. But you must allow solid wood to expand and contract with changes in humidity so that it doesn't cause the drawer to bind in its opening.

Plywood is a much more stable choice for a drawer bottom because it does not expand and contract with humidity changes as much as solid wood. Although reproduction builders and a few purists resist plywood bottoms, it's easy to argue their superiority. A plywood bottom can be housed completely in grooves in the sides, back, and front, and glued in place to strengthen the drawer box. Or it can be slid in from the rear and screwed to the drawer back, or even glued and nailed to the bottom of a drawer box with a false front. □

Matthew Teague is a writer and woodworker in Nashville, Tenn.

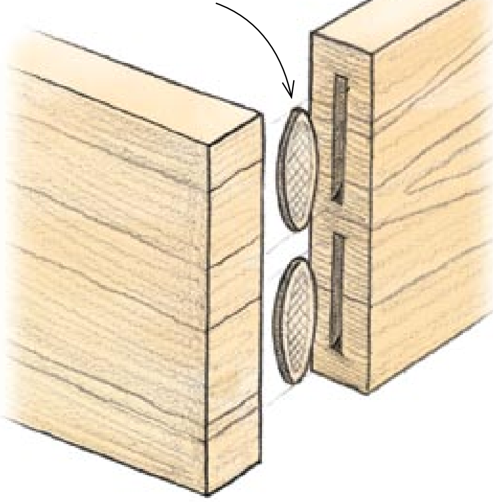

BISCUITS

Biscuits offer a quick, strong option to join the sides to the front of a drawer. Once a false front is applied, the end-grain (or plywood) ends of the drawer sides are completely concealed. This joinery system is a good option for kitchen cabinets, built-in units, and utility drawers. Biscuits also can be used to join the back of the drawer to the sides.

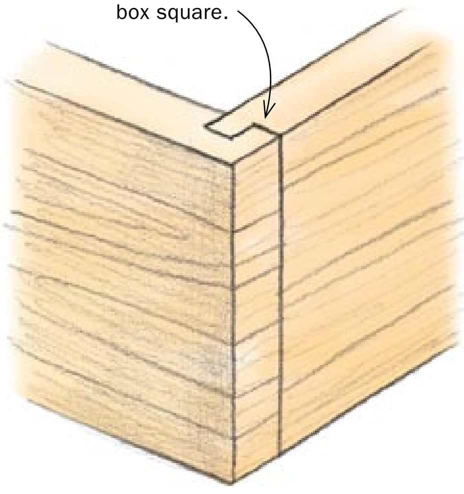

DADOED RABBET

The dadoed rabbet offers a strong mechanical connection at the front of the drawer box, but it's not very attractive. Attaching a false front to the drawer in this case gives the option more appeal. Simple dadoes or tongue-and-rabbet joints are suitable options for the rear joints in this style of drawer construction.

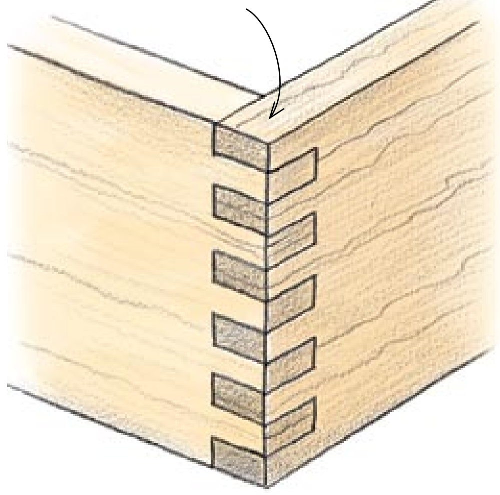

FINGER JOINT

The finger joint is usually hidden behind a false front. It has a series of narrow knuckles that lace together and offer plenty of long-grain glue surfaces. Because the tool setups are the same, if you use finger joints at the front of a drawer, use them at the back, too.

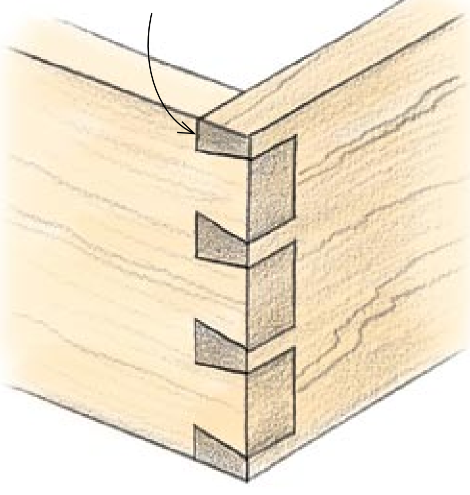

THROUGH-DOVETAIL

The angled tails and pins of a through-dovetail create a secure joint that resists pulling and racking forces. If you're cutting through-dovetails by machine (with or without a router jig), it's usually efficient to employ the same joint at the back of the drawer.

Drawer bottom options

Solid wood and plywood are the most common materials used for drawer bottoms. A solid-wood panel will expand and contract with humidity changes, so it must be sized and installed to allow for that movement. A plywood bottom offers a more stable (and simple) option, but traditionalists see it as thin and bland. Plywood's stability, however, gives a furniture maker more options when it comes to drawer design.

SOLID WOOD IS ELEGANT, BUT IT MOVES

Traditionally, solid-wood panels slide into place after the sides, front, and back of the drawer have been assembled. The back is cut shorter, allowing you to slide the bottom in place, and the bottom is screwed to the back through an elongated hole to allow for wood movement. Building a drawer in this way allows you to take it apart for repairs.

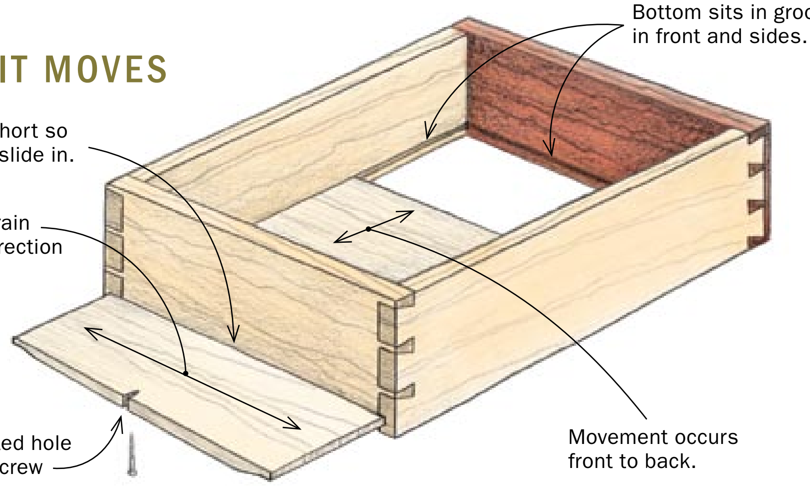

THREE EDGE PROFILES FOR A WOOD BOTTOM

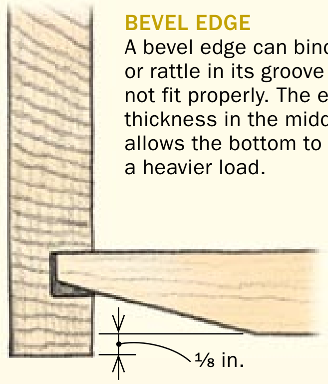

BEVEL EDGE
A bevel edge can bind or rattle in its groove if not fit properly. The extra thickness in the middle allows the bottom to carry a heavier load.

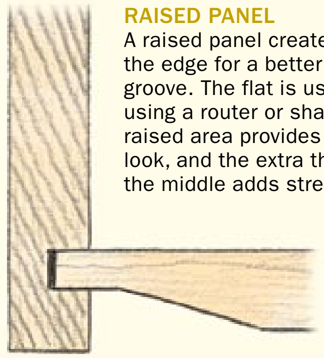

RAISED PANEL
A raised panel creates a flat on the edge for a better fit in the groove. The flat is usually cut using a router or shaper. The raised area provides a traditional look, and the extra thickness in the middle adds strength.

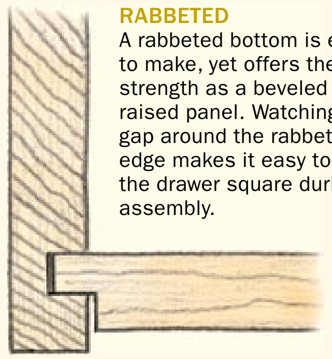

RABBETED
A rabbeted bottom is easier to make, yet offers the same strength as a beveled or raised panel. Watching the gap around the rabbeted edge makes it easy to keep the drawer square during assembly.

PLYWOOD IS VERSATILE AND STABLE

Plywood drawer bottoms are more stable than solid wood and have great strength. A ¼-in.-thick plywood bottom can carry all but the heaviest loads. Plywood bottoms can be slipped in after assembly, just like solid-wood bottoms, or fully housed in grooves, as shown at left. Because of its stability, plywood also can be glued and nailed to the bottom of a plywood drawer box with a false front, a quick, strong option for utility drawers.

CAPTURED IN GROOVES

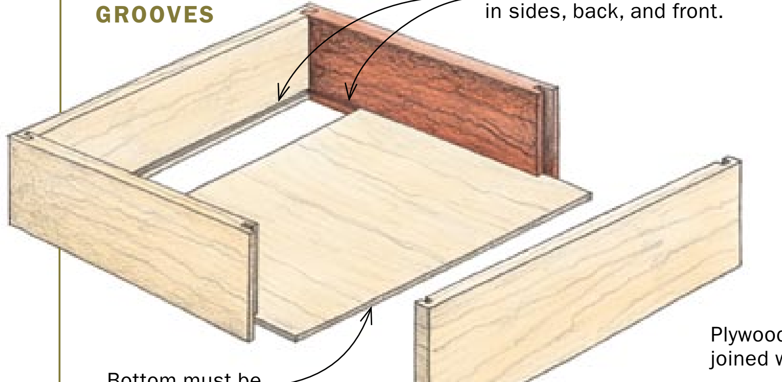

GLUED AND NAILED

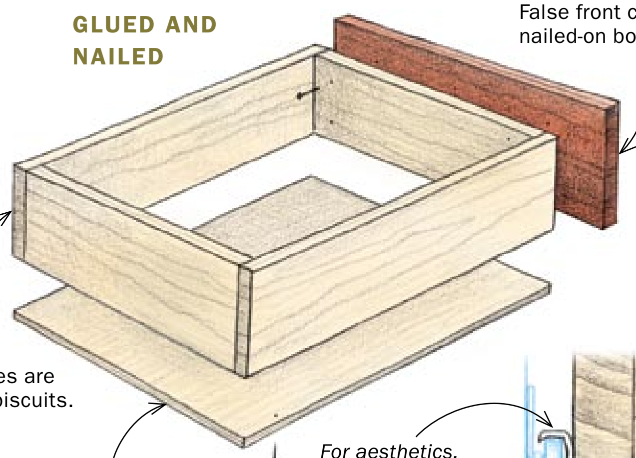

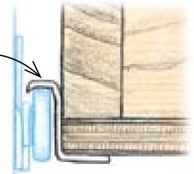

For aesthetics, choose slides that hide plywood edges.

A Better Way to Build Boxes

Expert jigs and tips speed the process

BY DOUG STOWE

I began making and selling boxes in the 1970s, and I've made them in all sorts of sizes, shapes, and styles. This one, though, has always been a favorite. I've made it in a variety of woods, and I like how the sides create a visual contrast with the top and miter splines. I also like the top: It's a floating panel but that's not obvious at first. The secret is a groove in both the top and sides. When they come together, the top and sides seem thinner than they are and the gap for expansion and contraction is hidden.

The sides have continuous grain

The sides are made from ⅜-in. stock, a suitable thickness for a small box. Because I like the appearance of the grain running continuously around all four sides, I add a few extra steps when preparing the stock. A continuous-grain look requires resawing, so start with stock milled flat to at least 1⅛ in. thick. It should be about 4½ in. wide and at least 16 in. long, a little longer than the length of the box front and one side.

Using a bandsaw, resaw the stock into two pieces, each just over ½ in. thick. Then move to the thickness planer to smooth and flatten the resawn side of each piece. Make light cuts until each piece is the same ⅜-in. thickness.

STURDY AND STRIKING

A great box gets its cachet from several sources: beautiful woods, the right proportions, and attractive joinery.

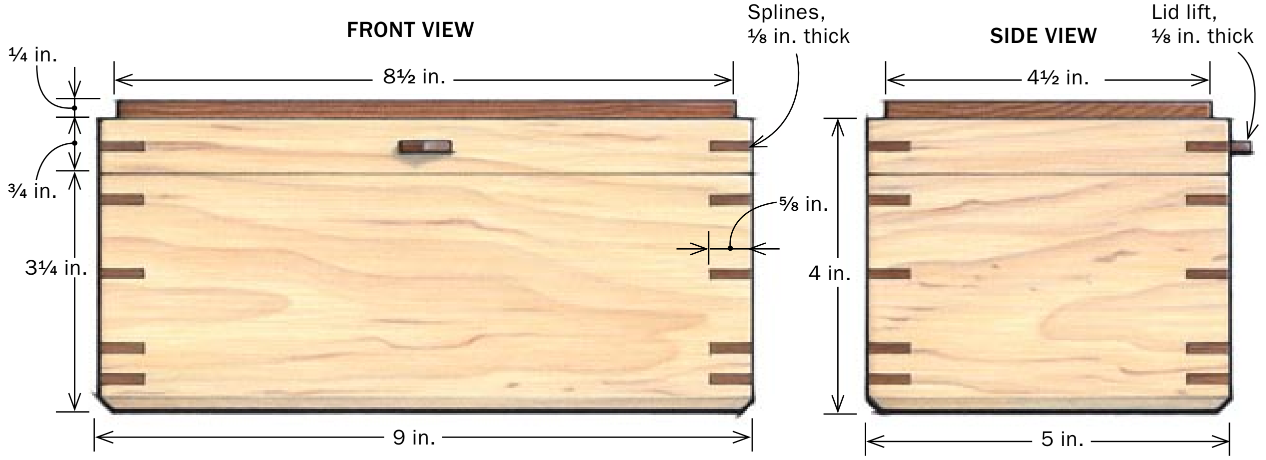

Photos: Tom Begnal; drawings: Christopher Mills

Tablesaw magic

Sled adds precision. *With the tablesaw blade at 45°, Stowe uses a crosscut sled to trim one end of each resawn piece (left), ensuring that the ends are square to the edge. With a stop block clamped to the fence of the sled (right), the opposite sides of the box are sure to end up the same length.*

Groove the sides. *Using the tablesaw rip fence to guide the stock, cut a shallow groove along the top and bottom edges of the four sides to accept the top and bottom of the box. For safety's sake, use a push stick.*

Lay out for continuous grain—Reassemble the sawn halves so the grain is arranged as it was before resawing. Then, open the halves like a book, with one end of the resawn board serving as the spine.

As you look at the two boards lying end-to-end, each with the resawn side facing up, keep in mind that each half must yield one front or back and one end. If an area of grain is especially striking, choose that section as the front and mark it in pencil. It doesn't matter where the front falls on either half; as long as there's room on each piece for one of the ends.

Online Extra

For continuous-grain layout options, go to **FineWoodworking.com/extras.**

Once the location of the front is decided, mark out the location of the back and ends (see the Online Extra). I also mark each side with an arrow pointing to the top edge of the box.

Sled and stop blocks ensure tight miters—Now you can cut the front, back, and ends to final length. I use a miter sled on the tablesaw with the blade tilted to 45° for all the mitering cuts. The procedure shown is for a left-tilt saw; for a right-tilt saw, make all the cuts from the opposite side of the blade.

With the outside face of one of the resawn halves against the sled table and the top edge against the sled fence, position the stock to trim about ⅛ in. or so off one end. This cut also squares the end. Repeat on the other resawn half.

Now add a stop block to establish the length of the part. Turn the stock over, slide the freshly trimmed end of the resawn half against the stop block, and make a cut to create the first side

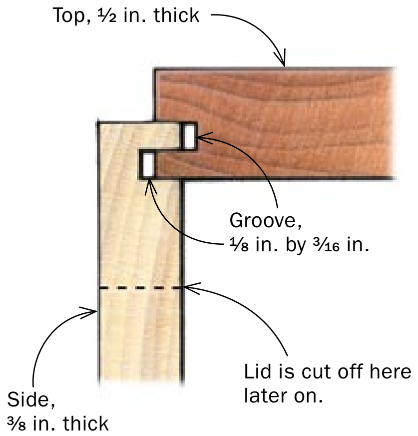

Same setup, different part. *Without changing the tablesaw setup used for the side grooves, cut a groove on all four edges of the top.*

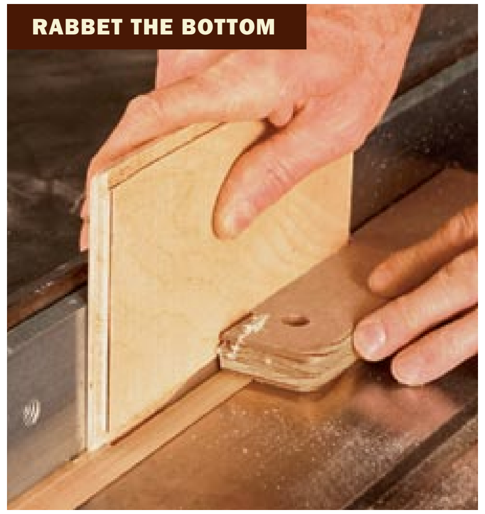

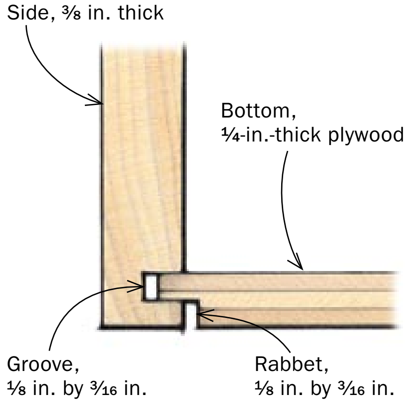

Still the same. *Without touching the tablesaw setup, you can cut the rabbet on all four edges of the bottom.*

No-clamp assembly

Tape the sides. *Butt the ends of the side pieces together so the grain flows continuously from one piece to another, then use packaging tape to hold the four parts together. A single piece of tape will do at each joint.*

Add glue and wrap it up. *Apply yellow glue to each miter (above), making sure all the surfaces are covered. Slip the top and bottom pieces into the grooves in one of the face pieces (below), then wrap the other sides around them.*

piece. Repeat on the second resawn half. Finally, reposition the stop block and cut the two remaining side pieces.

A groovy trick for top and bottom

For this box, I made the top from ½-in.-thick mesquite and the bottom from ¼-in.-thick Baltic-birch plywood. To get the size of these parts, temporarily tape together the box, measure the interior length and width, and add ¼ in. Fitting the top and bottom is an easy tablesaw operation. First, for safety's sake, make sure you have a zero-clearance insert in the saw. Then adjust the blade height to 3⁄16 in. Now here's the key: Set the distance between the blade and rip fence to the thickness of your sawblade.

Pass the box sides across the tablesaw, inside face down, and with each bottom edge against the fence in turn. Repeat with the top edge against the fence. Next, cut the top and bottom pieces to fit the grooves in the sides. These are cut standing up on edge along the fence. Cut along the end grain first. This way, when the lengthwise cuts are made, any resulting tearout of the end grain will be removed in the final cuts. The top panel partly overlaps the sides, hiding the expansion gap.

Assemble the box

Once the box is assembled, it's a big chore to sand the inside. So it's best to sand the inside surfaces of the sides, top, and bottom before assembly. Now, arrange the sides—end-to-end and in the order they will wrap around the box—on a flat surface, outside face up. Apply a strip of tape to join the four parts together. I prefer clear packaging tape, as it gets a good grip and allows me to see how the corners fit. With the tape in place, acting like a hinge, you can temporarily assemble the sides, top, and bottom to form the box and make sure everything looks OK.

Reopen the box, and start assembly by spreading glue (I use yellow glue) on the mitered surfaces. Miters absorb a lot of glue, so apply an even coat to both sides of the joint. Don't use too much glue, however, or you'll make a mess on the inside of the box.

Once you've added glue to all the joints, it's just a matter of rolling the taped sides around the top and bottom. In the process,

Close the deal. *Stowe stretches additional pieces of tape across the joints to close any gaps.*

Splines add strength and style

MORE TABLESAW MAGIC

A slot-cutting jig makes it easy to run the assembled box over the blade at a perfect 45° angle.

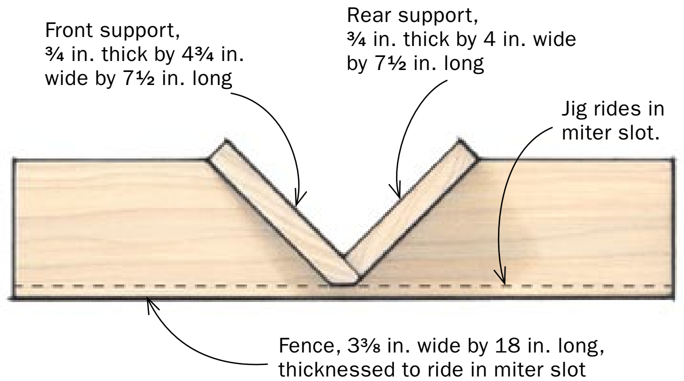

Story stick dials in setup. *Use a pencil to mark the slot locations on one corner of the box, then transfer the locations from the box to a thin, narrow stick. After that, use the stick to position a stop block on the jig.*

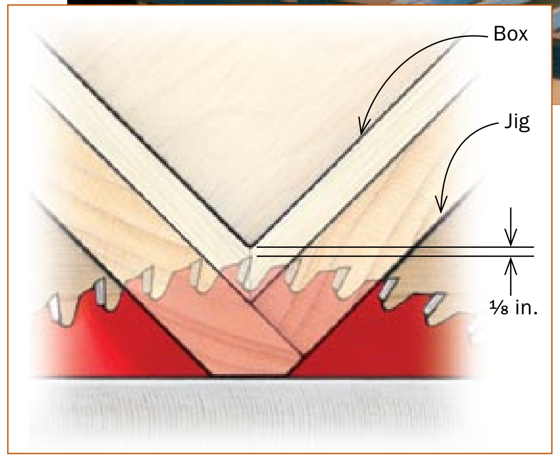

Cut the slots. *With the jig riding in the miter slot, make the first cut. Slot all four corners before moving the stop block for the next spline location.*

four flat sides transform into a box. To me, it's the magic moment in box making. Now add more tape, as needed, to pull each of the corners tight. Check to make sure the box is square and that each edge is perfectly aligned. Also make sure the top panel and the bottom are centered in the sides. Let the glue dry overnight.

Another simple sled for the splines

Splines add strength and they look good, too. To cut the slots for the splines, I use the tablesaw with a rip blade that cuts a ⅛-in.-wide kerf. This blade produces a kerf with a flat bottom that fits the square shape of the splines better than the shallow V-shape you get from typical crosscut or combination blades.

I use a jig to support the box at 45° to the table. To create the most glue area for the splines, set the blade to a height that cuts the slot just short of the inside corner of the box.

With the slots cut, you can move along to making the miter splines. To make the spline stock, I simply thickness-plane material down to the width required and then use the tablesaw to rip ⅛-in.-thick slices from the stock.

I precut the spline stock to approximate size. This eliminates having to use a saw to trim the splines after the glue dries. Add a coat of glue to each spline and slot, then slip in the splines. Make sure that each one is fully seated at the bottom of the slot. A few

Slip in the splines. *After planing the spline stock to fit and cutting out little triangles, add glue to the slots and splines and slide them into place.*

Sand the splines flush. *Stowe uses a stationary belt-sander to quickly sand the splines flush to the sides of the box. A block plane would also work.*

Safe separation

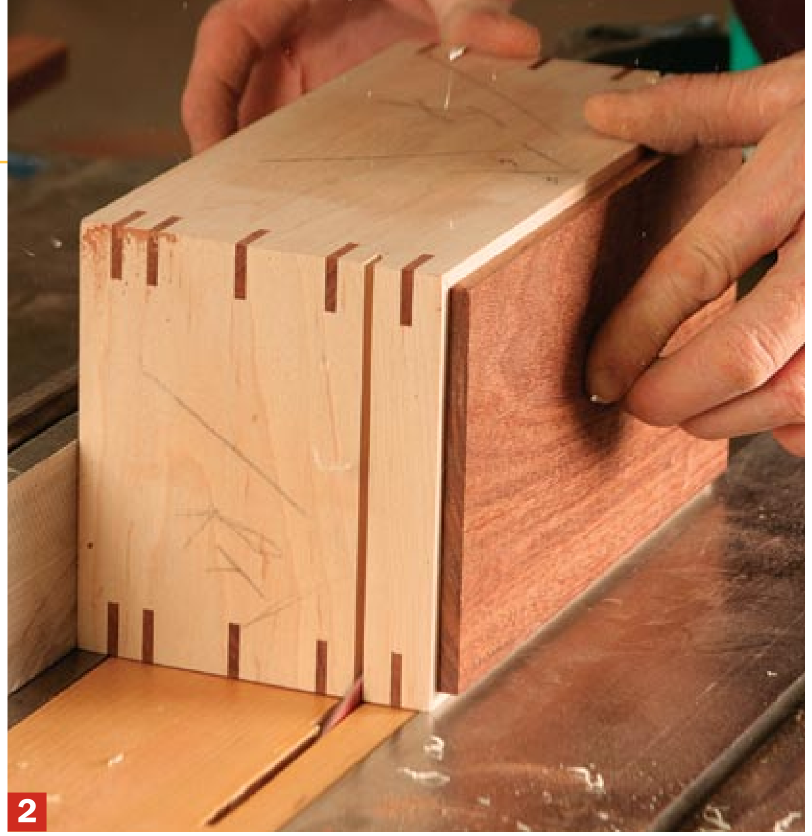

Cut the lid from the box in four steps. *Raise the blade to a height that's 1/32 in. less than the thickness of the stock (1). With the bottom against the rip fence, cut a groove all around the box (2). Use a sharp knife to cut through the thin web of stock that remains, separating the two parts (3). Once the lid is free, sand away the remainder of the web (4).*

light taps with a mallet can help. When the glue dries, I use a stationary belt sander to sand the splines flush to the box.

Instant lid on the tablesaw

I use the tablesaw to cut the lid from the box. The trick is to keep the lid connected to the box after making the cut on all four sides. A lid that breaks free could tip into the blade. If that happens, you will get a scored surface that requires extra sanding.

I solve this problem by leaving a thin web of material to keep the lid in place. To measure the blade height, position the box adjacent to the sawblade, then raise the blade to a height that's about 1/32 in. less than the thickness of the sides.

Before cutting, position the rip fence so the blade establishes the correct thickness of the lid. Make a cut while holding the bottom of the box against the rip fence as you pass the box over the blade. Then make the three remaining cuts all around the box.

Finishing touches make a big difference

Use a knife to separate the lid from the base, then sand away the material that remains. With a sanding block, apply a light chamfer around the perimeter of the lid and along all sharp corners of the sides. For uniform results, use the same number of strokes on each chamfer. To chamfer the bottom edges for an elevated look, I use a 45° chamfering bit in the router table, set for a 1/8-in.-deep cut.

For the lid lift, I use the router table and a 1/8-in. straight bit to rout a 1/8-in.-deep by 1/2-in.-long groove in the front face of the lid. Then, I use a dovetail saw to cut the lift to size and shape. Round the edges with sandpaper to match the radius of the router bit, then glue the lid lift into the groove.

After adding the hinges (see the facing page), I gave the piece a final light sanding with 320-grit sandpaper and finished it with three coats of Deft Danish Oil Finish. □

Doug Stowe builds furniture and boxes in Eureka Springs, Ark.

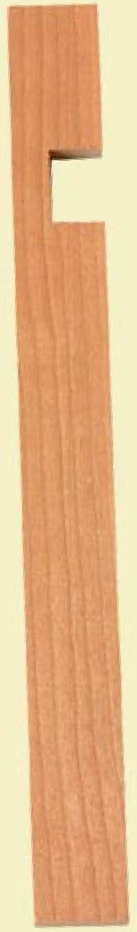

Flip stick is secret to perfect-fitting hinges

I discovered a simple way to use a router table to create perfect-fitting hinges. The secret is a notched stick—I call it a flip stick—that positions the router-table fence and stop blocks.

Make the stick about 1/4 in. thick, roughly double the width of the hinge leaf, and the same length as the box. Decide where the hinges will go and mark that distance on the stick. Only one hinge location needs to be marked.

Raise the tablesaw blade so it's just slightly below the barrel of a hinge. Standard butt hinges typically require the mid-point of the barrel to be on the edge of the stick, but the hinges I use have built-in stops, so the entire barrel must be outside the stick. Now, make a series of cuts to create a notch.

Install a 3/16-in.-dia. straight bit in the router. Adjust the bit height until it's just under half the thickness of the closed hinge. Now, butt the edge of the flip stick against the fence and position the stop blocks as shown below.

Rout the hinge mortises, first on the lid, then the box. Now, flip the stick end over end and reclamp the stop-blocks. Cut the second mortise in the lid and box.

1. MAKE THE FLIP STICK

Cut the stick to length. *The stick is cut to the same length as the box; use the box as a template to mark the length.*

Notch the stick. *Stowe uses his table-saw to cut a precise notch to accept the leaves of the hinge.*

A perfect fit. *Nibble away slowly until the hinge leaf fits snugly in the notch.*

2. USE THE STICK TO SET UP THE ROUTER TABLE

Position the stop blocks. *With the flip stick serving as a template, clamp a pair of stop blocks to the router fence.*

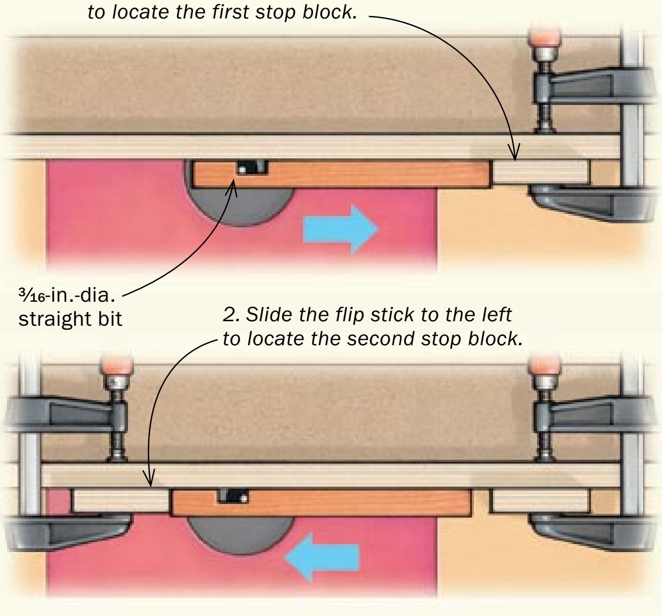

3. ROUT THE HINGE MORTISES

Mortise in two steps. *With the stop blocks in place, cut one mortise in the lid and a second on the box. Flip the stick and reposition the stop blocks; then cut the remaining mortises on the lid and box.*

Square the corners and install the hinges. *The router bit leaves rounded corners, so you'll need to square them with a chisel. The fit will be perfect.*

Hang It Up

What goes on the wall stays on the wall with these tips for anchoring your work

BY ANISSA KAPSALES

It's common to build a wall cabinet or wall shelf and not give a thought about how to hang it on the wall until it's finished. But planning ahead can give you faster, easier, sturdier, and better-looking ways to hang it up. There are lots of options, ranging from shopmade to store-bought, but in this article I am concerned only with the ones that are invisible (or nearly so) and, just as important, leave the piece flush against the wall.

The easiest and strongest way to hang things is to build the hanging element, such as a cleat or hanging rail, into the piece.

There also are a number of methods that are implemented after construction, such as keyhole slots, hardware, or various manufactured hangers. Often, these methods are fussier because they force you to work awkwardly on a finished piece.

Either way, whether built-in or add-on, it's important to consider the hanging method prior to cutting the first piece of wood because it can influence the thickness of parts, the construction, and the overall design. The following tips for hanging projects are the best I've picked up in my travels as a *Fine Woodworking* editor.

Anissa Kapsales is an associate editor.

FRENCH CLEATS ARE STRONG AND EASY

A French cleat is simply two pieces of interlocking material, one mounted on the wall and one attached to the furniture. For heavier casework like wall cabinets or closed-back shelves, this is one of the best methods there is. A French cleat can be shopmade or bought (there are extruded-aluminum options on the market); either way the concept is the same. A downside of this method is that you will lose a bit of depth to hide the cleat and keep the piece mounted flush against the wall. You may be tempted to skimp on the thickness of the cleat, but I wouldn't go much less than ¼ in. thick for a smaller piece and ¾ in. thick for larger, heavier work.

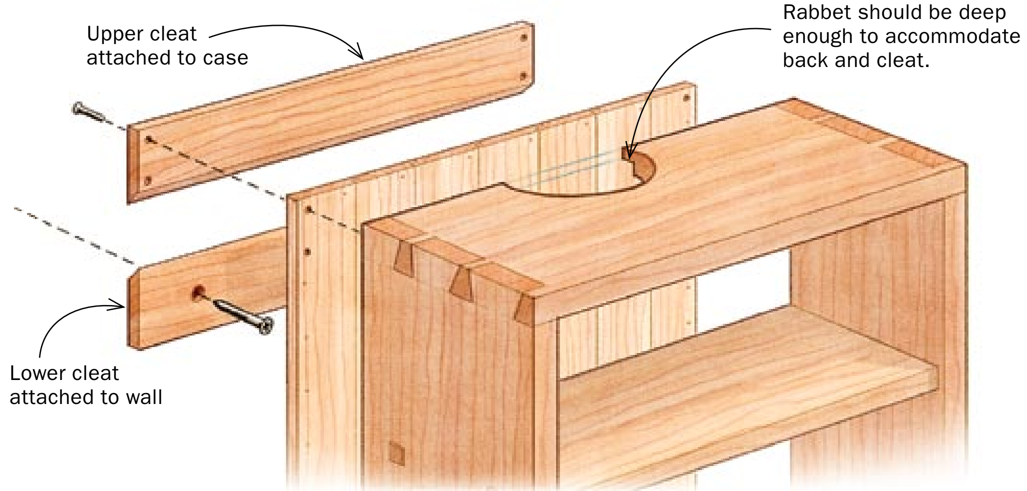

Interlocking halves. *Simply rip a piece of wood or plywood in half at a 45° angle (1). Screw one cleat through the back and into the sides of the cabinet (2). Secure the second cleat to the wall, lift the cabinet (3), and ease it onto the cleat.*

Manufactured cleats

Same concept. *Store-bought versions work the same way as shopmade cleats.*

The various extruded-aluminum versions of the French cleat work on the same principle as their shopmade counterparts. However, they are not built into the cabinet but are attached with screws after construction. That doesn't mean you can build the cabinet and forget about the manufactured cleat until afterward. Because you are screwing one part of the cleat to the cabinet, you still have to allow for the cleat's thickness if you want your work to sit flush against the wall. Manufactured cleats do tend to be thinner than the shopmade variety, so you will lose less depth in your cabinet. The cleats are going to be carrying all the weight, so they must be attached to a part of the cabinet or shelf that has good structural integrity, such as an internal rail or a solidly constructed back.

TWIST ON THE FRENCH CLEAT

If a cabinet is going to bear a lot of weight, and the planets have aligned so that you can hit just one stud with the wall-mounted side of the cleat, then this T-cleat is perfect. I came across this version at contributing editor Chris Becksvoort's shop. After he cuts his angled cleats and attaches one of them to the cabinet, he uses a pinned mortise and tenon to join a vertical piece to the horizontal, wall-mounted cleat. This system allows him multiple points of attachment along a single stud.

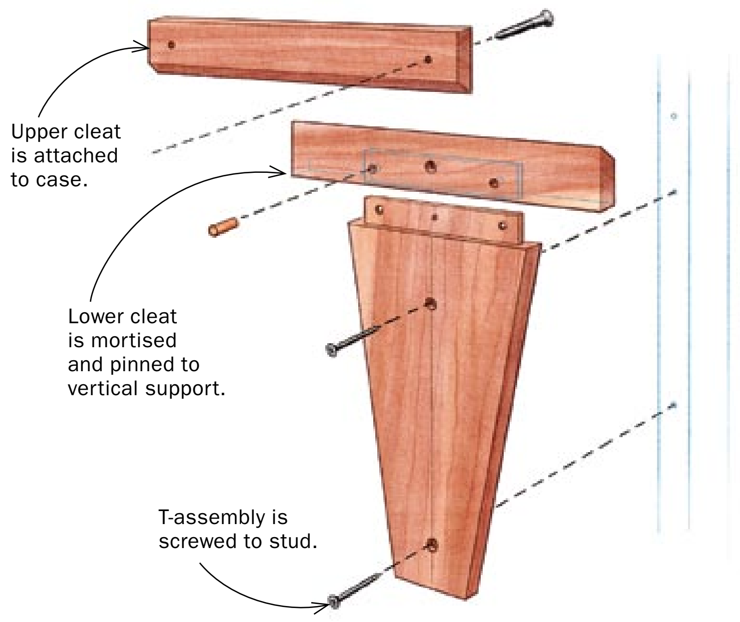

ADD A KEYHOLE HANGER

Keyhole hangers are sturdy, invisible options that work well for shelves with open backs or wall cabinets where you might not want to sacrifice the space to build in a cleat. Even though you don't install them until after the fact, you have to consider them in the initial construction. In Chris Becksvoort's cherry wall shelf (above), the upright pieces are ¾ in. thick to accommodate the metal hardware and the mortises that are cut underneath the hardware. After the hardware is installed, screws are driven into the wall and the hangers are slotted onto the screws.

Cut a mortise for the hardware. *After scribing around the hanger, freehand rout to a level that equals its thickness, and then use a chisel to clean to the line. Then rout a deeper slot to accept the screw head. Make sure to leave enough wood on the first level to secure the hanger with screws. Mortising the hardware allows the work to hang flat against the wall.*

CLEAT FOR OPEN-BACK SHELF

This modified French cleat works very well in open-back shelves because the screw holes are concealed. You still must compensate for the thickness of the wall cleat to mount the shelf flush to the wall, so the side and bottom pieces are deeper than the top piece. Because the top of this shelf (below) overlaps the sides, it gets notched between the side pieces. However, if the carcase were built with dovetails, the sides would extend through the top and notching wouldn't be necessary. The top could just get ripped to a shallower depth (the width of the sides minus the thickness of the cleat) across its width.

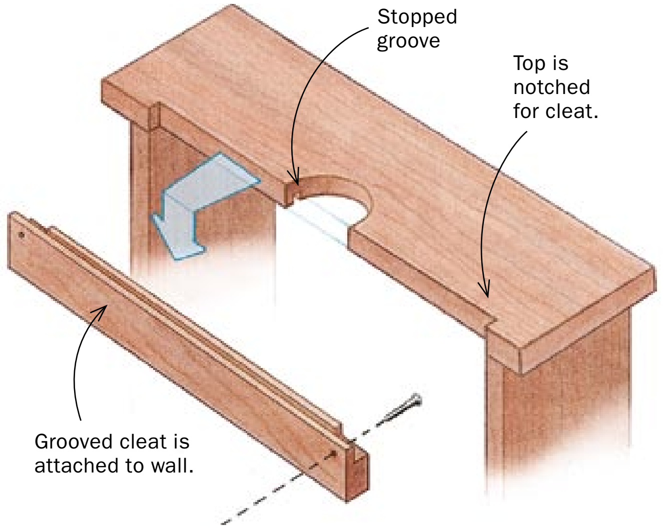

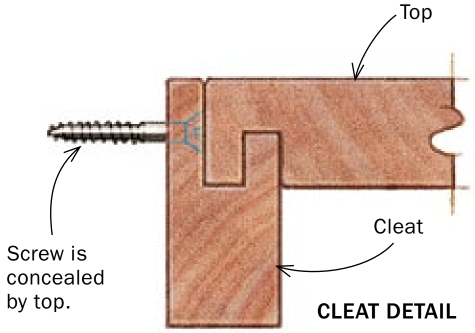

CUT KEYHOLE SLOTS IN NARROW EDGES

Keyhole slots function the same way as keyhole hardware and also leave your work flush with the wall. They can be used in thinner material than hangers, but they still require at least ⅝ in. of meat in the sides of a cabinet or shelf. The work is slotted so that a screw head in the wall fits in at the bottom of the slot and gets confined at the top. You'll need a special bit and a plunge router, using an edge guide to guide the router, or using a template and collar. The trick is to plunge down, run the groove, back up, and come back up in the same place you started. For this reason, I like to use a template and collar (right) or clamp a start/stop block at the beginning of the cut.

A specialized bit for keyhole slots. *Keyhole slots don't require additional hardware, but they do require a bit with a round cutter at the tip as well as a cutter on the shank.*

Slots are added after construction. *A router template (shopmade or store-bought) can be clamped to the workpiece (above). A plunge router equipped with a guide bushing and keyhole bit rides in the template to cut the slot (left).*

Photos, except where noted: staff; facing page (top): Dennis Griggs

HANGING RAILS ARE SIMPLE AND STRONG

An internal hanging rail should be mortised into the cabinet during construction. The rail sits inside and unobtrusively at the top and is screwed through to mount the cabinet directly to the wall. You can plug the screw holes with removable plugs to maintain easy access in the future. But if the cabinet is mounted high enough and things are placed inside, you probably won't see the screws anyway.

Cover up screw holes. *This tea-stained and milk-painted wall cabinet was hung by screwing through an internal hanging rail into the wall. Counterbore the screw holes and insert removable plugs to cover the screw heads.*

SCREW THROUGH THE BACK

Even easier than an internal hanging rail is this method of screwing through the back of the cabinet and concealing the screw holes with a magnetized molding strip. This method is very straightforward and the magnetized strip looks like a construction detail. Despite its simplicity, this method should be carefully planned and executed. First, the back has to be strong enough to hold the weight of the cabinet and anything that will be in it. It's best to use a back that is at least ¼ in. thick, and glue and nail or screw it in place for extra support. The cabinet back shouldn't be recessed from the back edges of the carcase or it could separate when you screw it into the wall. Keep the screws near the top of the cabinet so the wood strip can be discreetly bumped against the top, and mortise small rare-earth magnets into the back side of the strip, lining them up with the screw heads.

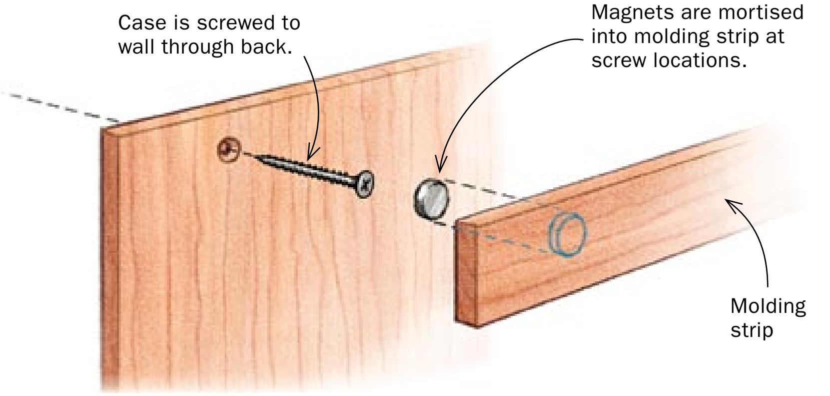

Drawings: John Hartman

WHEN THE TOP IS HIDDEN

Not entirely invisible, these metal hangers (called "rigid hangers") are screwed or mortised into the upper parts of a cabinet or shelf and have a keyhole or a hole that extends beyond the top and fits over screws mounted on the wall. These hangers work best on pieces that have a decorative molding and are hung well above eye level. As with most hanging devices, make sure you have enough structural integrity to mount them securely to the workpiece. You can mortise the hanger into the piece. Even if you don't, it is thin enough (less than 1/16 in.) that the cabinet or shelf will sit nearly flush against the wall.

Above eye level. *The ideal situation for rigid hangers is a cabinet like this one. The crown molding is above head height and also extends beyond the top of the case, concealing the hangers.*

SOURCES OF SUPPLY

KEYHOLE TEMPLATE AND ROUTER BIT
www.rockler.com

KEYHOLE HANGERS
www.toolsforworkingwood.com

MANUFACTURED CLEATS
www.rockler.com

RIGID HANGERS
www.leevalley.com

HOLLOW-WALL ANCHORS
Available at hardware stores and home centers

RARE-EARTH MAGNETS
www.kjmagnetics.com

Strength varies widely. *Different types of anchors vary in strength and ease of installation. Manufacturers can provide stats on the tensile strength (or pullout) and shear strength (or downward pull) of each.*

Hollow-wall anchors

All of these methods require screwing into the wall. The best scenario is that you'll hit two studs and be done with it, but that is rare. You'll be lucky to hit one. Since you don't want to tear apart the wall to insert 2x4 blocks between studs, you'll have to use hollow-wall anchors. Options range from expansion anchors and mollies to augers and toggles. Although toggle bolts are generally strongest, I prefer to sacrifice some strength and use augers. They are still strong, but easier to install precisely. The wings on toggles require an oversize hole in the wall, and there can be play as you tighten and position them. Augers are simply screwed into the wallboard, then screws are secured into the anchor. I've used auger-type anchors rated from 15 lb. to 100 lb. for shear strength. But that varies by brand and depends on the thickness of the wallboard, so be sure to check the manufacturer's specifications.

—A.K.

The High Art of the Lowboy

Elevate your skills with a regal case piece

BY PHILIP C. LOWE

The Queen Anne lowboy is about as traditional as American furniture gets, but from a modern perspective this 18th-century piece is still highly practical. The lowboy can be used as a dressing table or hall table, and the design has lost none of its elegance in the last 300 years.

For an intermediate woodworker looking to grow as a craftsman, the lowboy is an ideal project. It's not overly big or complex, but it is a satisfying, high-level test of many skills; so many, in fact, that you're almost guaranteed to learn one or two new ones before you're done. The piece combines a mortise-and-tenoned case with cabriole legs, dovetailed drawers, and a tabletop with a hand-shaped edge profile. A fan carving decorates the center drawer (see Master Class, pp. 92-94).

I've modified some of the period construction details to build a case that will accommodate seasonal wood movement. It's not an exact reproduction, but it captures the spirit of the early pieces.

The cabriole leg: grace under pressure

These cabriole legs are slender, but balanced and strong enough to support a heavy case piece without stretchers. They also do more than just hold the case off the floor; their long top posts are an integral part of the case itself. The case can't go

MAHOGANY LOWBOY

This small piece lets you develop your turning, joinery, and carving skills, and learn how to apply an antique-looking finish.

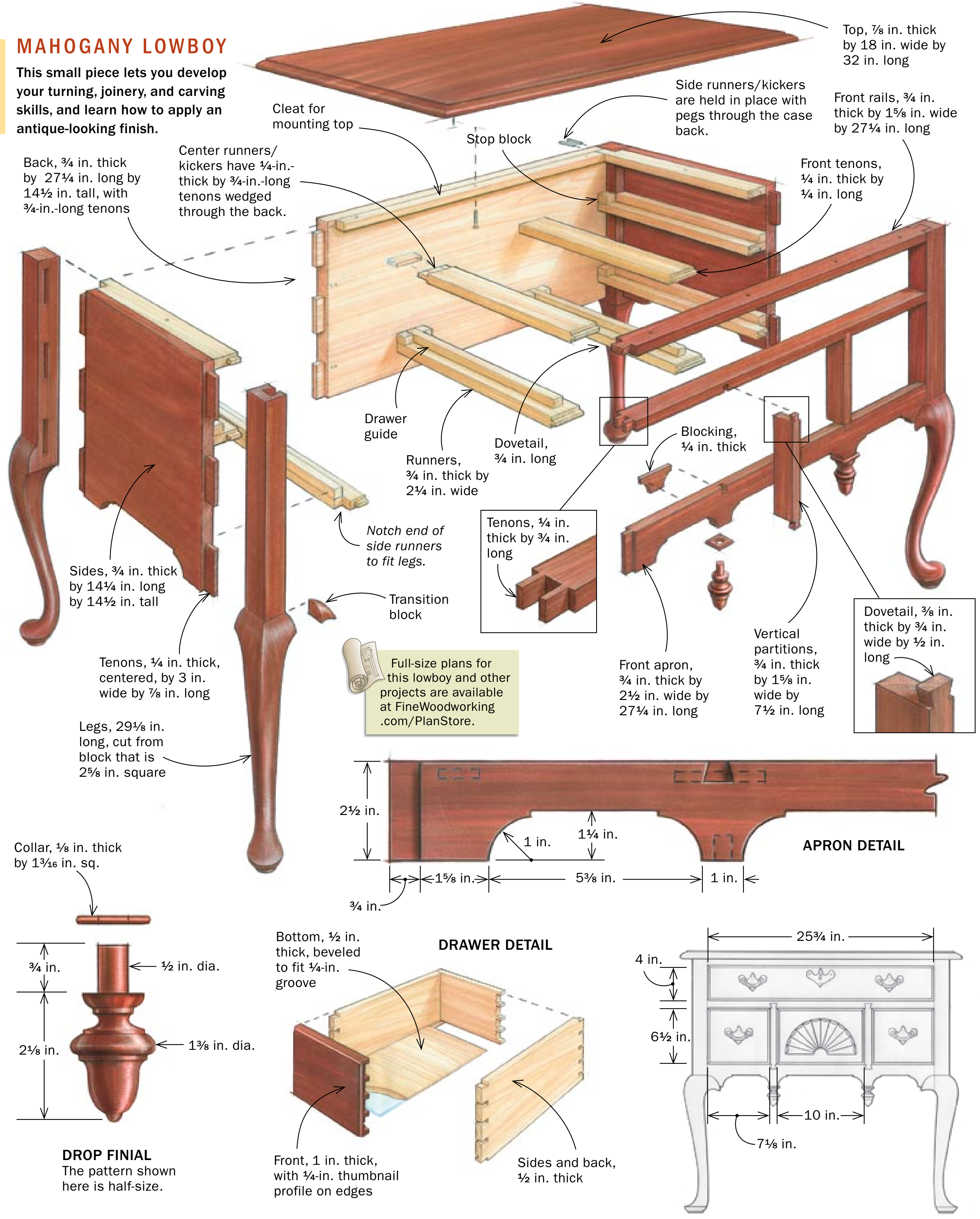

Photos: Steve Scott; drawings: Bob La Pointe

Turn and shape the legs

The legs take shape in two distinct stages. Start by laying out and turning the pad foot. Then rough out the leg's overall shape at the bandsaw and refine it with chisel, rasp, file, and scraper.

BANDSAW THE BLANK

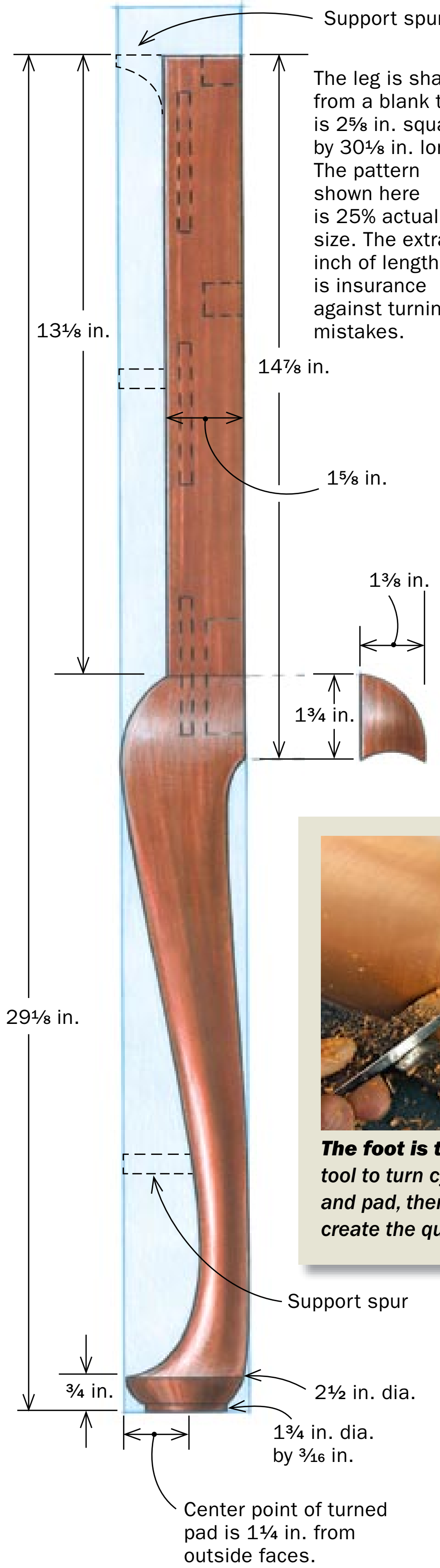

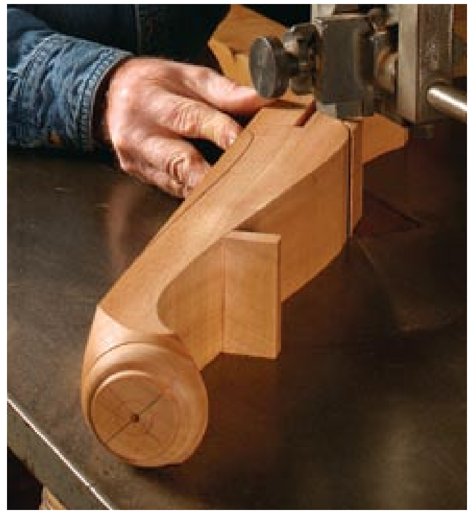

Cut the curved profile. *Start cutting the profile by first defining the edge of the spurs. Then make cuts to complete the basic profile.*

Rotate the blank and cut again. *Save the cutoff with the pattern drawn on it and tape it back in place to guide this second cut. The spurs will steady the leg for these subsequent cuts.*

The foot is turned. *Use a parting tool to turn cylinders for the foot and pad, then use a skew chisel to create the quarter-round profile.*

together until the legs are done, so let's begin with the four legs.

It's most practical to turn the foot and cut the mortises before sawing and shaping the curved cabriole profile. The first step is to orient the leg blanks for the best figure (see Dan Faia's "Porringer-Top Tea Table," *FWW* #191). Mark the inside corners of each leg, then trace the cabriole pattern on these two adjacent surfaces. On each leg, use a cutting gauge to score a line defining the post block. Set the gauge to the dimension of the waste to be cut away. Score these lines on the tops of the legs, too; this helps keep the position of the leg clear.

To lay out the turned foot, scribe a line around the bottom of the blank to mark the top of the foot. Draw center marks on the two ends of the blank to locate the points of the lathe centers for the offset turning.

Turning and mortising—At the lathe, use a parting tool to turn a cylinder for the foot from the layout line to the end of the blank. Then turn a narrower cylinder at the very end of the blank to establish the pad at the bottom of the foot. Next, use the point of a turning skew to score a line where the square corners of the blank meet the cylinder, defining the top of the foot. Use the skew to soften the hard corners of the square and then shape the foot by rounding off the cylinder to a quarter-round. Sand the foot while it is on the lathe.

Each leg is mortised on the two inside faces to accommodate one case side and either the solid back or the front apron and rails. Referencing from the top of each blank and factoring in the extra inch, use a combination square to mark the tops and bottoms of the mortises. Use a cutting gauge and reference from the inside corner of each blank to mark the fronts and backs of the mortises. Cut the mortises at the drill press or mortiser.

Saw and refine the shape—At the bandsaw, cut the leg's curved profile into one of the laid-out faces. Tape on the waste piece at the back of the leg and cut the other face. Be sure to save the long waste piece sawn from the post. You can use this material for transition blocks. Next, with the leg held in a bar clamp and vise, use a spokeshave to remove the bandsaw marks and smooth all four surfaces.

After cleaning up the sawcuts, finish shaping the leg by cutting a series of chamfers at the corners to round the profile. File the leg smooth and scrape with a card scraper. Then trim the post blocks and cut the posts to length.

Precise joinery ensures a square case

Building the case is a challenge in precision. There are no steps or reveals to mask inaccuracies where the sides, back, or rails meet the corner posts. Everything is flush.

With the mortises already cut in the posts, the next step is to lay out and cut the tenons on all of the mating pieces. I begin with the back and the front rails. These pieces must match exactly in overall length from tenon shoulder to shoulder. This helps ensure that the case comes together squarely and cleanly, with no gaps.

It's also crucial to locate all of the tenons correctly on the thickness of the stock so that the outside case surfaces are flush with the posts when the joint is assembled. To do this consistently, scribe the end grain for both cheeks using the outside face as a reference for your marking gauge. Set the gauge for ¼ in. to scribe the outside cheeks and ½ in. to scribe the inside cheeks.

To cut the cheeks, set the stock face-side down on the tablesaw and raise a dado

Layout lines guide the shaping. *Start with a centerline on each face, then split the distance from the centerline to the edge of the leg with a line that runs from the knee to the ankle.*

SHAPE WITH HAND TOOLS

Chamfer the corners to form an octagon. *Use a flat chisel. To stay with the grain, always work from the convex surfaces to the concave ones.*

Shave away the remaining corners. *Use a flat-soled spokeshave to cut a second, narrower set of chamfers, effectively rounding the leg.*

Smooth the surface. *Finish rounding the profile with a rasp and a smooth file.*

Trim the post. *Dimension the post block with a pair of stopped cuts on the tablesaw. These cuts are made to the right and left of the fence so that the inside corner of the post block is against the fence. The untrimmed waste just above the knee is removed after glue-up.*

MULTIPLE TENONS MADE EASY

Lay out matching tenons. *Clamp one of the front rails to the back panel and scribe the shoulder lines for both pieces simultaneously. Clamp the scribed rail to its mates and scribe shoulders on the remaining pieces.*

Cut the joinery with a dado set. *For consistency, cut face-side tenon cheeks on all of the pieces before adjusting the setup—if needed—to cut the opposite cheeks.*

Mark out and cut the tenons. *For the sides and back panel, you need to fashion multiple tenons from the full-width tongues. Hold each panel against its mating post and scribe the mortise locations on the tongue (above). Remove the waste with a coping saw and chisel (right), leaving a little room for the tenons to move in the top and middle mortises. This allows room for seasonal expansion of the sides and back toward the top. The transition blocks prevent downward expansion.*

cutter to just under the lower scribe line on the end of the first workpiece. Adjust the rip fence for 1⁄32 in. less than the tenon's length and use the miter gauge to help control the workpieces. For the intermediate front rail, use a ½-in. dado stack to remove the waste from between the twin tenons. Hold the piece vertically against a miter gauge. Use a sacrificial backer block and use the miter fence as a stop. Raise the blade to just below the scribe line before making the cut.

At the workbench, use a shoulder plane to fit the tenons to their mortises. To help keep the outer surfaces flush, avoid paring too much stock from either tenon cheek. After paring to the shoulder lines with a chisel, cut the multiple tenons from the full-length tongues on the back and side panels.

Before you can start gluing up, you'll need to dovetail the top rail, then mortise the front rails and the case back for the kickers and runners that will support the drawers. Then, with the case dry-fit, locate and fit the dovetailed vertical partitions. Finally, bandsaw out the shape of the front apron and clean up the profile.

Transition blocks marry legs to case

Start building the case by gluing up the back and front assemblies separately. The legs transition into the case with blocks that are glued on and shaped to match the curved profile. It's much easier to apply and shape the two blocks on the front apron now than when the case is fully glued up.

Begin by holding each block in position to see whether it is flat against the apron and the back of the knee. If needed, plane the block to fit. When this is done, draw the pattern on the front and saw the front profile, saving the offcut. Now return to the bench, hold the block in position again, and trace the shape of the leg onto the surface of the block that mates to the leg. To bandsaw this profile, set the transition block back onto the offcut and saw, staying 1⁄16 in. from the line.

Glue the two front transition blocks in place using a rub joint and hold them with a spring clamp if needed. Use a chisel, rasp, and scraper to shape the blocks (see "Porringer-Top Tea Table," *FWW* #191). The side transition blocks are attached and shaped in the same way, but are installed after the case has been glued up.

Dry-fit the case for layout

The next step is to add the sides without glue and clamp the case snug so you can accurately fit the crossmembers that span the interior. These are the runners that support the drawers from underneath and the kickers that sit above the drawers and prevent them from tipping downward when pulled out. In the space separating the upper and lower drawers, the crossmembers serve both of these functions. Rip all of the runners and kickers and crosscut them to a little over final length.

Measure from the back side of the apron and middle rail to the inside of the back. Use a knife to mark these distances on the parts. Cut the tenons with a dado blade and fit them. On the center runners and kickers, make handsaw cuts ¼ in. from the edge and ¼ in. from the shoulder to accept wedges for the through-tenons in the back panel. The left and right runners

MORTISE FOR THE RUNNERS AND KICKERS

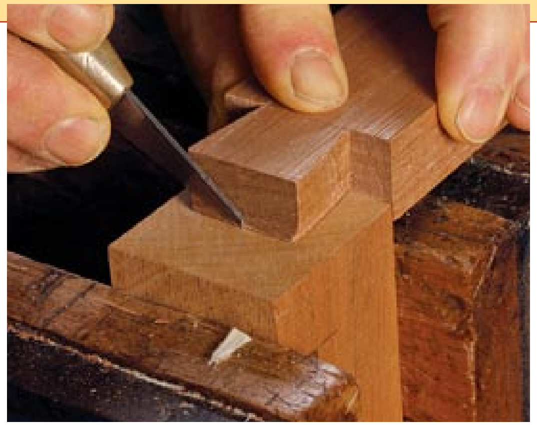

Dovetail the top rail to the legs. *The top rail is dovetailed into the tops of the leg posts. Lowe rabbets the tail to enhance accuracy when transferring the layout.*

Locate the kickers and runners. *They are tenoned into the front rails and apron, and those mortises can be cut by machine, but the back panel's width means its mortises must be cut by hand. The mortise locations are picked up from the dry-fit front assembly (left) and marked on both faces of the back panel. Use a ¼-in. chisel to chop the through-mortises, working in from each surface (right).*

LOCATE THE DIVIDERS

Measure to locate the drawer partitions. *The whole case is dry-fit at this point (above). The vertical drawer partitions are dovetailed into the top of the apron and the bottom of the intermediate rail. The clamp helps hold the partitions in place while you knife the profile on the front surfaces of the apron and rail (left). Now disassemble the case, saw the mortise, and chop and pare to fit.*

The case comes together

GLUE UP THE FRONT AND BACK

Apply yellow glue to both mortises and tenons. *Once each assembly is in clamps, lay a straightedge across both post blocks to make sure they don't twist out of square. On the front assembly, check the diagonal dimensions and adjust the clamps to bring it into square. Glue the partitions in place after the front assembly has dried (below).*

and kickers are notched to fit around the post blocks.

20 mortises, 20 tenons, one glue-up

The case is ready to come together. With clamps ready, apply glue to the mortises in the back legs and to the corresponding tenons on the sides. Seat the sides. Next, glue the center runners and kickers into their mortises in front, then apply glue to the front leg mortises and matching side tenons. Gently lower the front into place, taking care to seat the unglued tenons of the runners and kickers in the rear-panel mortises. Stand the assembly upright and use bar clamps to seat the joints. Before the glue sets, check the diagonals for square. When all is square, drive the wedges into the through-tenons at the back of the case. Clamp the side runners in place, drill into them through the back, and drive wooden pegs to secure them.

Drop finials adorn the front apron

In order to create a 1-in.-square platform for each drop finial and collar, glue ¼-in.-thick backer blocks to the rear of the ¾-in.-thick front apron, matching the latter's profile. Drill a ½-in.-dia hole into the center of each platform and into two blanks for the collars. Turn and sand the finials, including the ½-in.-dia. tenon.

To mark the size of the collar, slip it over the finial's tenon and insert the tenon into the apron. Using a 3⁄32-in.-thick spacer held against each edge of the platform, scribe a line around all four sides of the collar. Handsaw to these lines and then clean up the edges with a block plane. To create the bead, bevel all eight edges, moving the piece across the bottom of a plane, then refine the curve with sandpaper. Lastly, glue the collar to the platform and the finial into the apron.

ADD THE TRANSITION BLOCKS

The blocks are shaped in place. *After cutting the basic curves in the bottom and front of the block, glue it in place with a rub joint (above left). With the block in place, pare away excess material to reach the final, rounded shape. Start with a chisel, making a series of side-to-side passes (above right). Then use a carving gouge with a shallow profile in a series of bottom-to-top passes to blend the curve further (right).*

The final glue-up. *Back and front assemblies are joined by gluing the side panels into the rear posts, gluing the interior kickers and runners into their mortises in the front, and then settling the front assembly into position.*

Wedge the tenons. *The center runners are secured in back with wedged through-tenons. Glue the wedges and tap them home. When dry, saw them off and plane them flush.*

Crowning touch: a hand-shaped top

The two-board top has a thumb-molding profile that is characteristic for this period, and I enjoy creating it with hand tools. The top is fastened with screws through the front rail, the two top kickers, and the cleat on the top inside surface of the back panel. Elongate the screw holes in the back to accommodate movement.

Stain and shellac for a flattering finish

I finished the piece with a water-based stain (Cuban mahogany from www.wdlockwood.com) and shellac. This approach evens out variations in the color, shows the figure well, and yields a richer tone than the brassy color that natural mahogany sometimes has. Next, I applied dark grain filler to help show the pore structure and followed with a few more coats of shellac. The last step is to rub out the finish with 0000 steel wool and apply a coat of paste wax. □

Philip C. Lowe restores period furniture and teaches at the Furniture Institute of Massachusetts (www.furnituremakingclasses.com).

HAND-SHAPED EDGE PROFILE

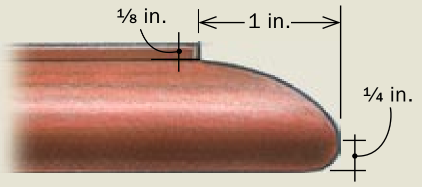

No router in sight. *Start by using a dado blade to cut a 1⁄8-in.-deep rabbet. Then use a handplane to shape the profile (top). A shoulder plane allows you to work all the way into the corner (bottom).*

Success With Dyes

How to dial in the color and apply it evenly every time

BY JEFF JEWITT

Photos: Mark Schofield

Most woodworkers have read about the benefits of using water-based dye stains to color wood. They are available in a range of colors, from bright primaries to muted wood tones, and their transparency lets the wood's personality shine, popping the figure in woods like curly or bird's-eye maple.

But using dyes for the first time can be a frustrating experience. Newcomers often end up with streaky surfaces or uneven colors, perhaps because they apply the dyes the same way they wipe on pigment stains purchased from the local home center. With a pigment stain, you wipe on a heavy layer in a fairly random manner, wait a few minutes to let it soak in, and then wipe off the surplus. But dyes soak in almost instantly, so the application must be quick and precise to avoid lap marks and streaking.

In this article I'll explain how to use a water-soluble dye stain, giving you the keys to achieving reliable results the first time and every time.

Prepare the wood, tools, and dye

Dyes don't emphasize sanding errors as much as pigment stains do, but you still want a well-sanded surface, so sand up to P180 or P220 grit. The last sanding should be done shortly before applying the dye to lessen the chance of getting dirt or hand grease on the wood, which might interfere with the dye. Remove the sanding debris with a vacuum or compressed air.

Preemptive raising of the grain is advisable only with woods that really "puff" when water hits them, such as red or white oak. Woods that don't react to water as severely, such as maple and cherry, can be smoothed easily after the dyeing process. If you do raise the grain, wipe down the wood liberally with distilled water, let it dry, and then sand with the last grit of sandpaper you used.

You can apply water-based dyes with a spray gun or by hand. A spray gun will really speed up the process, but it isn't mandatory. If you do spray, protect your lungs: A standard organic vapor respirator rated for paints will suffice. When applying the dye by hand, I use cotton cloths, which I buy in 5-lb. boxes. These cloths are somewhat water-repellent straight out of the box, so to increase absorption, I soak each one in hot water and then wring out the excess before using it to apply the dye. Be sure to wear gloves.

It's impossible to keep dye from running over to an adjacent surface, so I always dye all sides at the same time. A nail board made with drywall screws works well because you can dye the underside of an object first, then place it on the nail board and dye the other sides without marring the underside of the project.

Water-soluble dyes are sold as powders or liquid concentrates. I'll focus on the powders, as they are more economical ($5 to $16) and come in a wider range of colors.

As an example, I want to give this maple side table from Shaker Workshops (see photo, facing page) an amber antique look. A starting ratio is typically 1 oz. dye to 2 quarts water, but don't mix up all the dye at once. Instead, use the same ratio but prepare just a little more liquid dye than you expect to use. For a small table like this one, a pint should be plenty. That way you'll have plenty of dye powder left over to make the liquid darker if necessary. There are a couple of ways to measure small amounts of powder if you don't have a scale. If the dye comes in a

The right color and concentration

Water-soluble dye powders are not only the most economical way to color wood but also come in the widest range of colors. A 1-oz. container will yield around a quart of liquid dye. You can buy them at www.wdlockwood.com, 866-293-8913; or www.woodworker.com, 800-645-9292.

Filter before using. *Dissolve the dye in hot water, let it cool, then pour the liquid through a fine-mesh paint filter to strain out any lumps.*

Make a test panel. *Test the dye on a scrap of wood from your project. If the color is too light, add some dye powder; if it's too dark, add some water.*

Preparation is key

SEAL PROBLEM AREAS

End grain is a usual suspect. Once you have the right color, test it on another sample board to see if the wood absorbs the color evenly. In this case (above), the end grain has absorbed too much dye and become darker than the surrounding wood. On areas your sample boards indicated would absorb too much dye, apply a coat of a water-based stain controller (right). This will limit the wood's absorption capacity.

GIVE IT A LIFT

To avoid liquid pooling under the bottoms of the legs and creating dark areas when you apply the dye, drive a drywall screw into the end of each leg.

transparent container, you can mark the quarter measurements on the outside. Or, pour the powder onto a sheet of paper; divide the heap into two equal halves, and then divide one half in half again to obtain roughly ¼ oz.

Tap water contains trace iron compounds that react with tannins in woods like cherry or oak and will produce gray spots that might be noticeable under light colors, yellows in particular. Therefore, use distilled water for light dye colors (tap water is fine for darker ones). The water should be about 140°F, or roughly the temperature of hot tap water. Stir in the dye and let the contents cool to room temperature. It's not a bad idea to run the cooled mixture through a fine paint strainer or, in a pinch, a coffee filter to remove any small lumps of dye powder.

Test this mixture on a scrap of wood from your project to see if it's the color you're after. The color of the wet dye will be very close to how it will look after a clear topcoat has been applied. Once you have the color you want, finish another scrap board, end grain and all. Use this sample board to see if the dye colored unevenly. If you notice dark splotches or excessively dark end grain, you should use a stain controller on your project before dyeing it (see photos, left).

Dye quickly, or you'll live to regret it

Because it's easier to work on flat boards than inside corners, dismantle your project as much as possible before applying the dye. The next step is to apply a stain controller to areas the sample board told you are likely to absorb too much color. On this table, I applied a water-based stain controller to the end grain on the top and also to the drawer pull. When it was dry, I sanded these areas with P320-grit paper.

The most common problem newcomers have with dyes is streaking or lap marks. This is caused by not keeping a wet edge when applying the dye, and consequently applying an overlap of dye to an area that already has started to dry. There are a couple of ways to lessen this problem. First, apply dyes in temperatures between 50°F and 75° F. In addition, avoid strong cross-ventilation such as open windows. There's no smell from water-based dyes and the fumes aren't considered hazardous unless you spray the dye.

Dunk a pre-wetted and wrung-out cotton cloth into the dye solution and let it soak for about 10 to 15 seconds. Take it out and squeeze out the excess. Then apply the dye as quickly and evenly as you can. When staining a tabletop, always start at an edge, never the middle, and go with the grain. Cover the back side, edges, and top, moving as fast and as efficiently as possible. If necessary, dunk the rag in the dye again to recharge it, or you can keep another rag sitting in the mix, ready to go.

Once the top has been covered completely, remove any excess dye with clean paper towels. On larger areas, such as a dining table, you can use the same application methods, but you may want to have one helper to keep recharging the cloths with dye and another to handle the paper towels.

On complicated surfaces such as a table base, a plant mister allows you to apply the dye with one hand and then blot up the excess with a clean cloth in the other. Work from the bottom up, and if you get a drip on any area, apply more dye immediately to that area or it will show up as a dark spot later. If you have even a portable compressor, a $35 spray gun works great (www.northerntool.com, item No. 222087).

On drawers, I like to stain only the outside and top edge of the drawer front, which takes a bit of care. I soak a small piece of rag in the dye, wring it out as much as possible, and then carefully apply the dye. The end grain of the dovetails will darken after the

Two ways to apply dye

WIPE FLAT SURFACES

Work fast to avoid streaking on large surfaces. Start at the edges and go with the grain, using a large cloth (above). Jewitt dyes only the face and the top edge of a drawer front (right). He doesn't dye the ends because the end grain will darken under a clear coat.

SPRAY COMPLEX SURFACES

You can use a plant mister to apply dye to complex or small shapes or to vertical surfaces such as legs (above). Wear a respirator even with this type of spraying. Use a cloth or paper towel to remove surplus dye (left) before it can dry.

When things go wrong

If you make a mistake, the die is not cast. If you miss a small spot on a large surface, it is best to dye the whole area again. Likewise if the color is too weak, apply the dye again.

BARE SPOTS

If you overlook an isolated area, wait until the dye dries and then touch up the bare spot.

topcoat is applied, so I don't bother trying to stain them. If you choose to dye the end grain (for example, if the rest of the piece is being dyed a dark or vibrant color), use a small artist's brush (for more on finishing a drawer, see Finish Line, *FWW* #189).

Be very careful when dyeing work veneered with standard interior PVA glue (yellow or white). Water-based dyes really soak into the wood and can release the glue's bond, resulting in a bubble under the veneer. If you veneer your own work, use a two-part glue like Unibond 800 or a waterproof glue like Titebond III.

Use a clear finish of your choice

When the dye has dried, the wood may take on a dry, matte, or mottled appearance that's very different from what it looked like as you were applying the dye. This is normal; the color will take on depth and luster as you apply a clear topcoat.

If the surface feels rough, don't resort to sandpaper; instead, lightly smooth it with a gray abrasive pad, going with the grain. The pad's cushioned surface is less likely to cut through the stain. Most of the time I don't bother; I just apply a couple of coats of clear finish and then sand the surface with P320-grit paper.

One note of caution: Brushing on a water-based clear coat over a dried water-soluble dye will lift some of the color. To prevent this, apply a sealer coat of dewaxed shellac or an oil-based sealer first. If you're planning to use an oil- or solvent-based finish, you don't have to worry; the dye won't lift with these products. □

Jeff Jewitt is the author of Taunton's Complete Illustrated Guide to Finishing *(The Taunton Press, 2005).*

STREAKS

While the wood is still wet, rub the darker areas with a clean, damp cloth to remove some of the dye.

TOO MUCH COLOR

If an area needs a drastic reduction in color, pour a little distilled water on the surface and scrub the wood with a gray abrasive pad.

4 Custom Pulls That Please the Eye

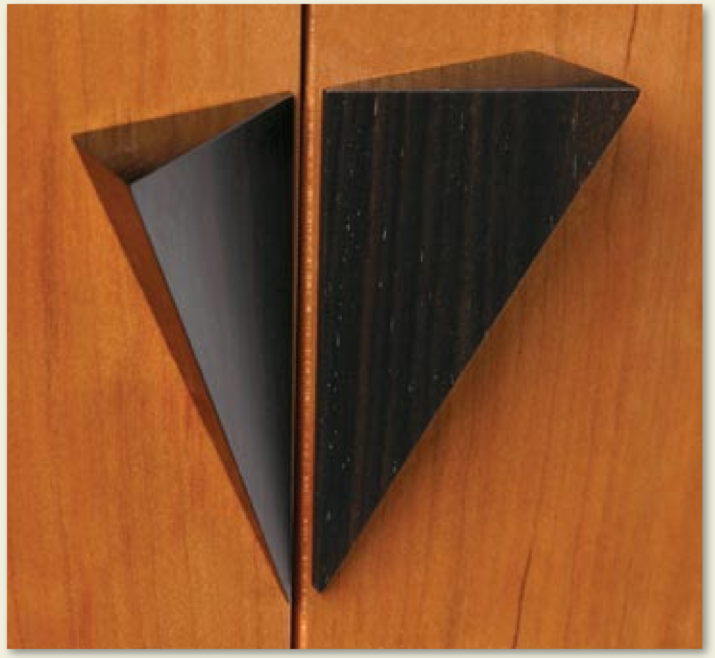

Clever jigs create the curves and facets on these small parts

BY MICHAEL C. FORTUNE

Door and drawer pulls are often the last detail we consider when building a piece of furniture. But a poorly chosen or placed pull can ruin a piece, while a well-designed, well-placed one can make the whole piece sing.

Don't limit yourself to off-the-shelf pulls. Custom pulls aren't difficult to make, and you don't need a lathe to do it.

When we look at a piece, our eyes are drawn in different directions by the lines of its form. Custom pulls can encourage or discourage the eyes' movement and so emphasize different aspects of the form.

That said, a pull's function trumps its form. It should be comfortable, unobtrusive, and sized for easy use. And it should be removable, because finishing is easier without it. But don't simply screw it on. Cut a tenon on the pull and fit it into a mortise. That keeps it from being split by the mounting screws, and from spinning loose later.

When making small knobs and pulls, I use jigs for accuracy and to keep fingers away from blades and bits. For the pulls, use a closed-grain hardwood. The ones in this article are ebony and rosewood.

Michael Fortune designs and builds furniture near Peterborough, Ont., Canada.

Simple knob that sparkles

This knob can be mounted as either a diamond or a square. All four sides are tapered so that it's easier to grasp, and the face is beveled to create four facets that meet in the center. A small tenon routed onto the bottom and fit into a mortise in the door prevents the knob from spinning and the mounting screw from splitting the knob. A diamond-mounted knob requires one more step than a square-mounted knob because its grain should run from corner to corner, rather than from side to side, so that no end grain is visible when the face is faceted.

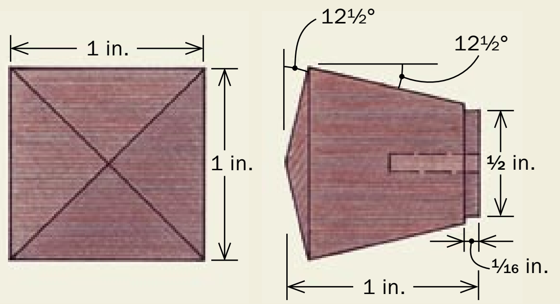

1. CUT BLOCKS FROM STRIPS

The first step is to cut stock to the right width. Set the blade at 45° for diamond-mounted knobs and at 90° for square-mounted knobs. This gives the right grain orientation for each style.

DIAMOND

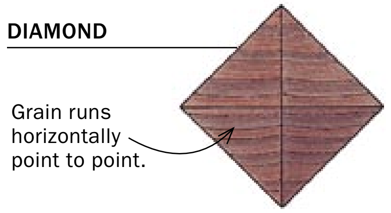

SQUARE

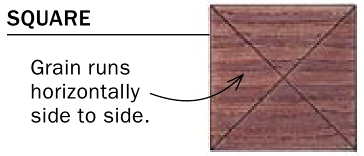

START WITH A MITER CUT FOR DIAMOND KNOBS

Cut 1⅛-in.-wide strips at 45° so the grain will run from corner to corner in the finished knobs. A mitered stop block that hooks around the end of the fence (at right in photo) ensures that all the strips are cut to the same width. It should be removable so that these small offcuts won't get trapped between it and the blade.

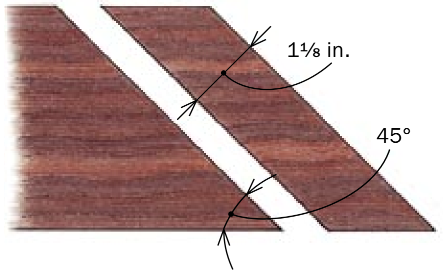

Cut 1⅛-in.-square blocks. *With the blade set at 90°, cut square blanks for the knobs. Again, use a removable stop that hooks around the end of the fence so they're all the same size.*

2. DRILL A PILOT HOLE

Drill pilot holes for mounting screws. Use a fence and a stop block so that the pilot hole is located precisely in the center of each blank.

3. ROUT A TENON

Move to the router table to create a ½-in.-square tenon on the bottom of the knob. A push block, notched to hold this small part securely, allows you to safely run the knob past the bit and also prevents tearout.

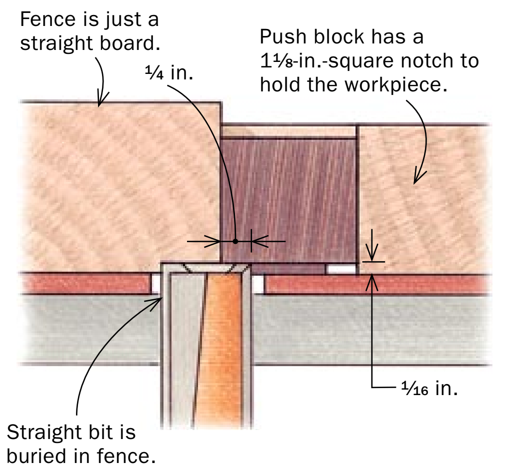

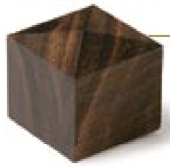

4. CUT FACETS ON THE FACE

A jig holds the knobs in place as the tablesaw blade, set at 12½°, cuts one facet at a time. The four facets will meet at a point centered on the face of the knob.

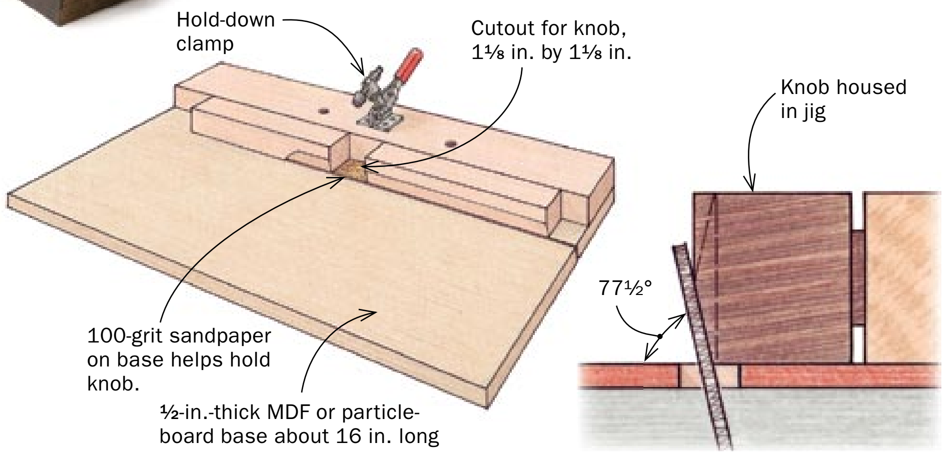

5. BANDSAW A BEVEL ON EACH OF THE SIDES

Another jig, akin to a tablesaw tapering jig, holds the knobs secure as the side bevel is cut. The front position cuts the taper on two adjacent sides. The second position cuts it on the last two sides.

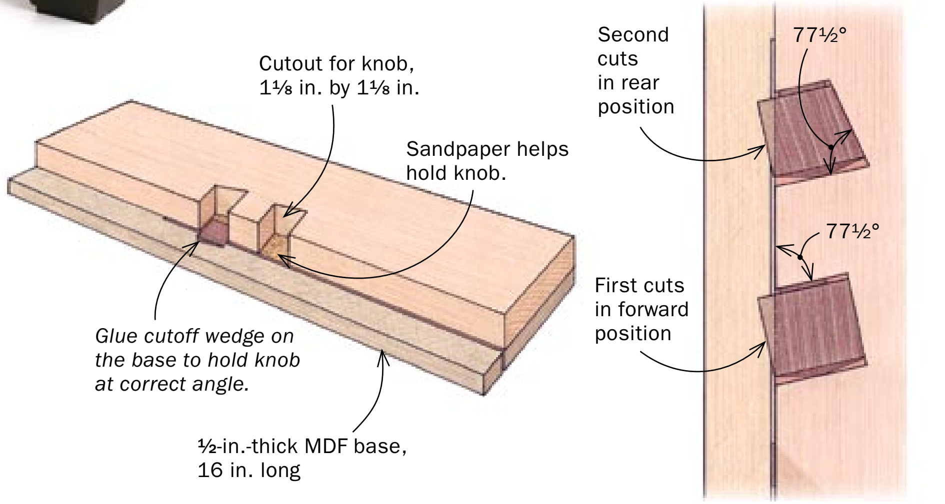

Photos: Matt Kenney; drawings: Vince Babak

Slender and strong pull

The slight bullnose softens this pull's look and feel, and beveled sides make it easier to grasp. The ends are also beveled, which helps to lighten the visual weight. It's best to mortise this pull into the door or drawer and secure it with screws.

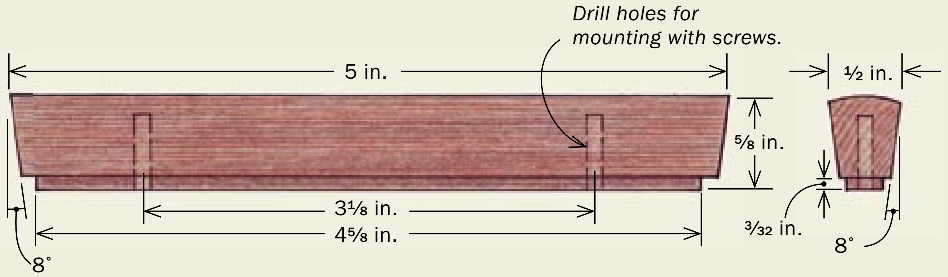

1. FIRST ROUT A BULLNOSE

Use a ½-in. roundover bit to put a slight radius on the two outside edges of the stock. Use a push stick as you near the end.

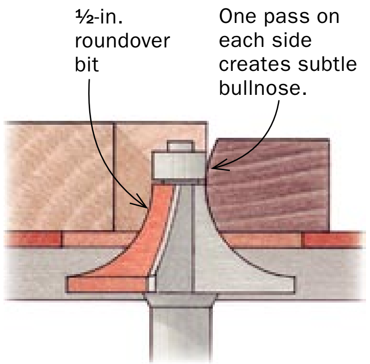

2. THEN BEVEL THE SIDES

With the table tilted 8°, cut a bevel on each side of the pull. The table doesn't need to be reset for the second cut, because the bottom of the pull remains flat on the table.

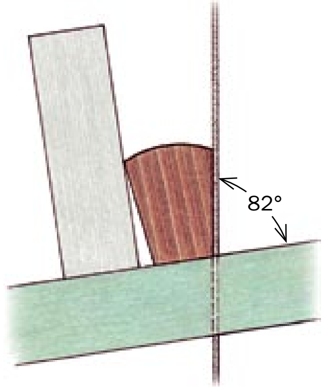

3. ROUT RABBETS TO FORM TWO SIDES OF THE TENON

Use a straight bit to cut a rabbet on each side of the stock. Run the stock against a fence whose working face is beveled 8° so the workpiece stays perpendicular to the tabletop.

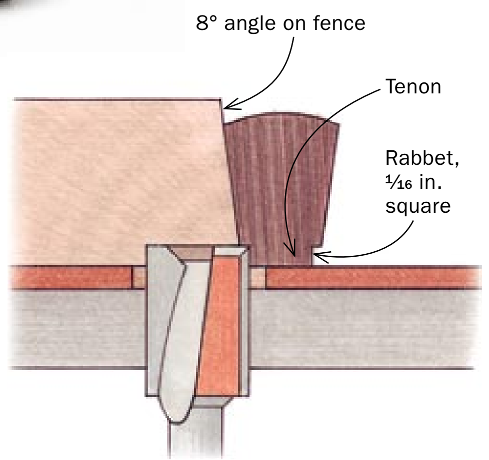

4. CUT TO LENGTH AND FINISH THE TENON

Set the miter saw to 8°. Place a strip of wood tapered at 8° under the stock to keep it square to the saw. Trim the ends. Then rout rabbets on either end to complete the tenon.

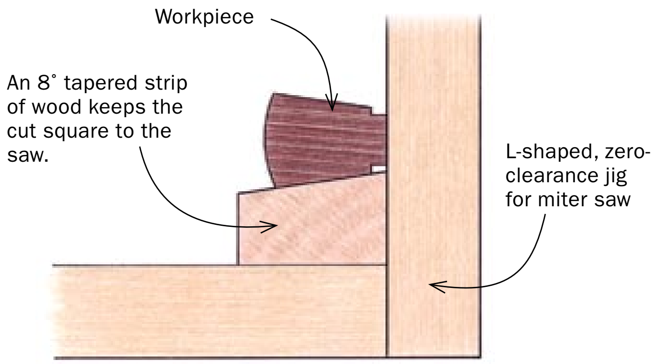

5. DRILL PILOT HOLES AT THE DRILL PRESS

Set the pull against a fence tapered at 8° (this can be the same fence you used at the router table) and drill two pilot holes into the tenon. Fortune uses two stops, each with an 8° face, to create a precise distance between the holes.

A pull that's right on point

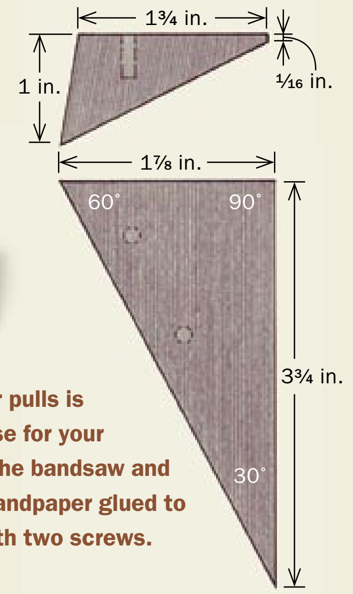

The outer edge of these triangular pulls is beveled to provide secure purchase for your fingers. They're quickly made on the bandsaw and smoothed by rubbing them over sandpaper glued to a flat surface. Attach the pulls with two screws.

1. CUT THE FACE

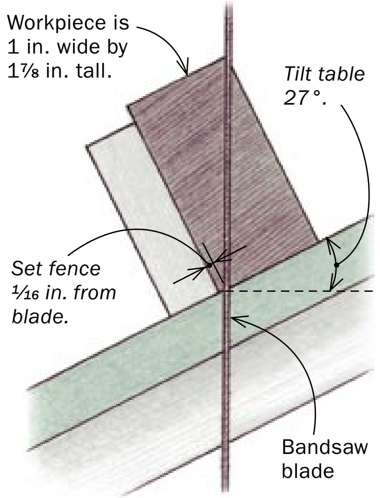

Set the bandsaw table to 27° and cut along the length of the stock. Set the fence ¹⁄₁₆ in. from the blade, measured at the table. This cut gives you the broad tapered face of the pull.

2. CUT THE OUTER EDGE

Set the bandsaw table to a 10° angle. Then mark the front-view triangle on the stock and cut off the pulls. This creates a 30°-60°-90° triangle, with the 30° at the bottom. Because there is a left pull and a right pull, cut one from each end of the stock to create mirror images.

Curve appeal

This pull is beveled for easy grasping, with a slightly rounded face that's pleasing to the touch. The pull stands proud on hollow posts made from ¼-in. brass tubing (available from hobby stores). Mounting screws pass through the posts and into the pull. Two simple jigs help you shape the arcs on the front and back, so it's critical that you make them well. If the jigs are not smooth, the arcs on the pulls won't be either.

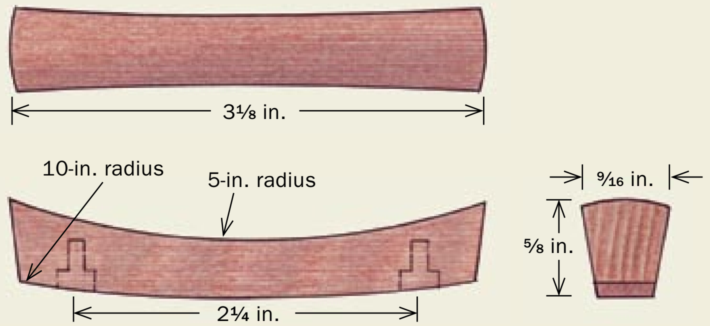

1. USE A JIG TO ROUT THE ARCS

To make it safer to work on the pulls, Fortune keeps them together as long as possible and uses a simple jig for all the routing. The fence makes it easy to align the workpiece on the jig. Two small toggle clamps and some sandpaper glued to the fence and jig base hold it secure. After marking the front arcs and removing the waste at the bandsaw, use the jig and a bearing-guided straight bit to clean them up.

JIG MAKES REPEATABLE ARCS

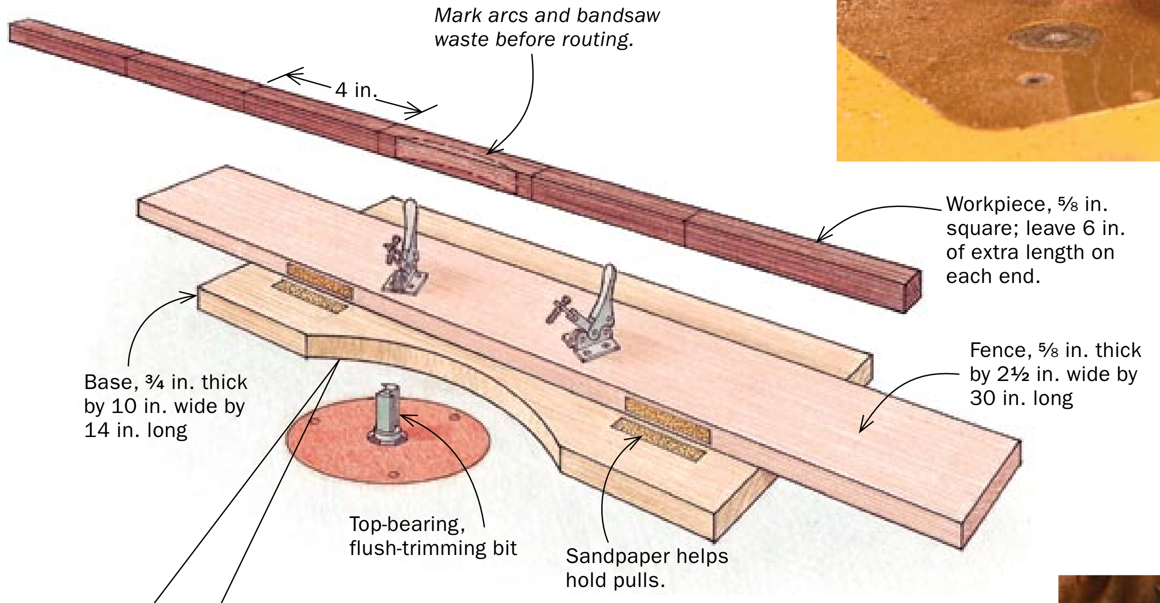

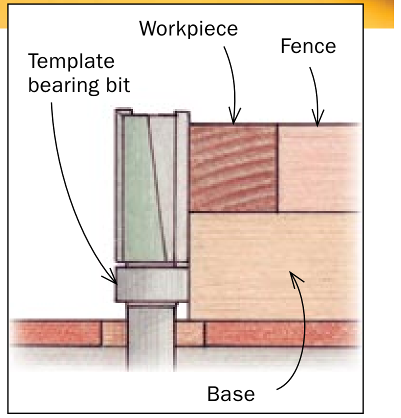

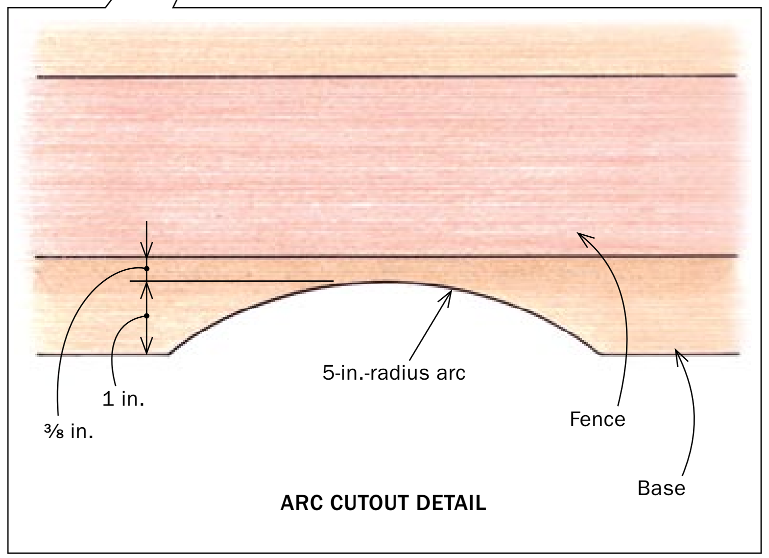

ARC CUTOUT DETAIL

2. FLIP THE JIG TO ROUT THE BULLNOSE

Use a ½-in.-radius roundover bit to put a slight curve on the top and bottom edges of the arc. The bearing runs against the workpiece, not the jig, and the workpiece is flipped to round both edges.

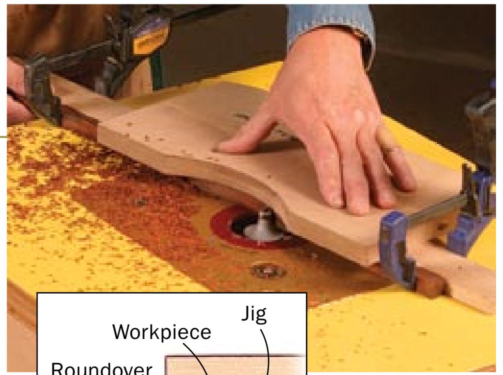

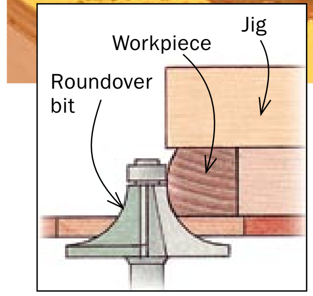

3. DRILL STEPPED HOLES FOR THE POSTS AND SCREWS

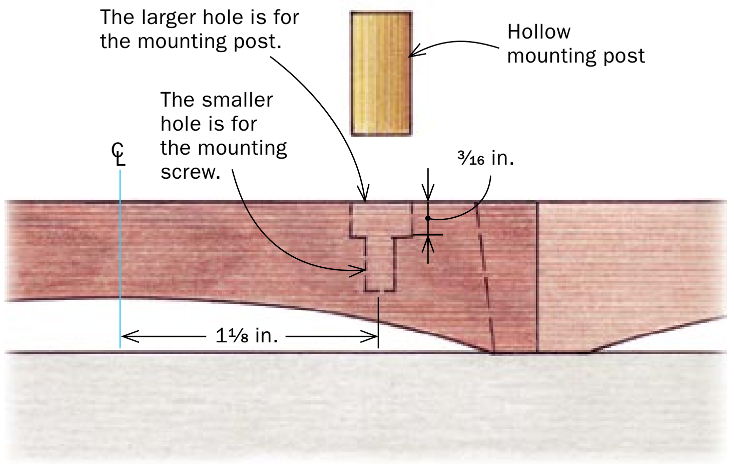

First, drill the holes that will receive the hollow posts. The holes should be 3⁄16 in. deep with a diameter that matches the posts. Next, drill the pilot holes for the mounting screws. These should be centered in the holes for the posts.

4. DRAW IN THE SECOND ARC

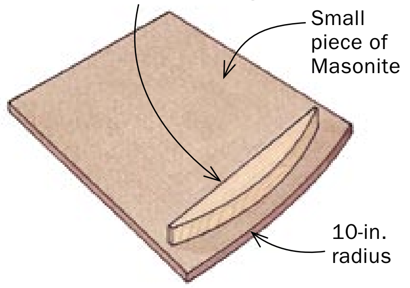

Cut a 10-in.-radius arc on the end of a small piece of Masonite. Register the front of each pull against an arced fence (just use one of your earlier offcuts). It should be glued on the Masonite so that the apex of the Masonite's arc just reaches the back of the pulls. Use the jig to mark the arc on the back of each pull. Cut the curves on the bandsaw, then clean and fair them with a file and card scraper.

5. TAPER THE SIDES AT 10°

Tapers allow a good grip. Tilt the bandsaw table 10° and bevel the long edges.

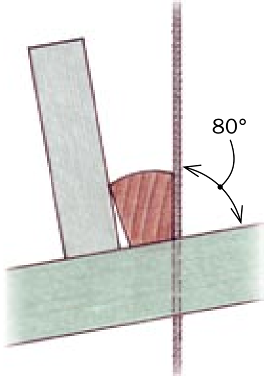

6. CUT TO LENGTH WITH A MATCHING BEVEL ANGLE

Set the miter-saw blade at 10° and cut the pulls to length (3½ in.). Under the workpiece, use a ramp that is beveled 10° on one side. This ramp guarantees that the sides will meet the top and bottom at 90°. Sand the pulls and break the sharp corners before finishing.

readers gallery

J. ALBERT HUDSON
Knoxville, Tenn.

Hudson was so inspired by the double oxbow Salem secretary in *Home Furniture* #7 that he vowed to reproduce it. Twelve years later, at the age of 88, he did just that, making a few design modifications along the way. As a retired engineer, scaling the photograph and producing detailed plans was easy, but finding the right wood wasn't. A friend came to the rescue, selling him a quantity of quartersawn bee's wing mahogany. In addition, he used crotch mahogany, poplar, tiger maple, and crotch cherry. Set on using a French polish finish, but not wanting to try his inexperienced hand on this piece, Hudson applied aniline dye before turning over the secretary (26 in. deep by 46 in. wide by 100 in. tall) to professional finisher David Reeves to complete.

PHOTO: JOHN LUCAS

SCOTT MORRISON
Columbus, Mont.

Influenced by Windsor rockers of the 1700s and the work of Sam Maloof, Morrison built this walnut rocker/cradle as a design and construction challenge. Because the base and the rail of the cradle are asymmetrical, Morrison had to make 21 different spindles to connect the two. He finished the piece (44 in. deep by 50 in. wide by 48 in. tall) with tung oil and wax.

2008 DESIGN IN WOOD EXHIBITION, SAN DIEGO COUNTY FAIR

Since 1998, *Fine Woodworking* magazine editors have traveled to Del Mar, Calif., to choose the Best of Show winner at the San Diego Fine Woodworkers Association's juried competition. This year, as always, the caliber of the work was outstanding. PHOTOS: ANDREW E. PATTERSON

NATHAN R. ANDERSON
San Diego, Calif.
Best of Show, *Fine Woodworking*;
First place, Musical Instruments

For this dreadnought guitar, Anderson's fourth, he decided to stay with a very traditional design and focus on the quality of the woodworking and the sound of the instrument. The primary woods are East Indian rosewood and bear claw Sitka spruce. Anderson also used Madagascar ebony, Honduras mahogany, and paua abalone inlay. Finished with gloss lacquer, the guitar is 5 in. deep by 15½ in. wide by 41 in. tall.

CRAIG THIBODEAU
San Diego, Calif.
First place, Traditional Woodworking—Furniture

Thibodeau, who won Best of Show last year, gained inspiration for this Macassar ebony and holly chess table (27 in. sq. by 34 in. tall) from Emile-Jacques Ruhlmann's Art Deco furniture. The playing surface, bubinga and holly squares, is framed with a Gabon ebony and holly inlay. A jatoba drawer is used for piece storage, and a slide-out tray with mother-of-pearl inlay and Gabon ebony runners holds pieces captured during play. The finish is conversion varnish and lacquer.

JIM BERGER
Ramona, Calif.
Fourth place, Wood Turning—Embellished/Mixed Media

Inspired by the work of fellow turners Stephen Hatcher and Dennis Liggett, Berger made this maple burl hollow form, 8 in. dia. by 7¾ in. tall. After sketching the design on the vessel, he used power carvers to excavate for the inlay. He then glued in the minerals (calcite and mica stems and howlite flowers) with cyanoacrylate glue, sanded everything flush, and applied several coats of lacquer.

JOHN KETTMAN
Mercer Island, Wash.
First place, Veneering/Marquetry—Furniture

For this sideboard, 23 in. deep by 76 in. wide by 42 in. tall, Kettman used the Boulle technique of cutting marquetry, which creates two sets of veneers at once, a positive and a negative. The result is two pieces of furniture that are the reverse of each other in color (yes, he made two sideboards). The tiger maple and Gabon ebony veneers are mounted to a solid mahogany carcase and finished with shellac and wax.

STEVE YOUNGLOVE
Brimfield, Ill.

This wine cabinet is the result of Younglove's fondness for Arts and Crafts furniture and his need for a place to store the wines he and his wife buy on their trips to Kelleys Island in Lake Erie, Ohio. The quartersawn white-oak cabinet (18 in. deep by 42 in. wide by 35 in. tall) is stained, glazed, and finished with three coats of hand-rubbed satin polyurethane.
PHOTO: BOB PREECE

V. PERI
Seattle, Wash.

Peri was commissioned to make a hope chest to hold keepsakes for a client's four children. On each of the interior compartments he inlaid the first initial of each child, using the willow branch motif from the outside of the chest. Finished with tung oil, the bubinga chest (16 in. deep by 34 in. wide by 24 in. tall) has a wenge base and wenge and mother-of-pearl inlay. PHOTO: STEVEN VAN ROEKEL

MARTHA COLLINS
Sequim, Wash.

Living and working on the Olympic Peninsula in Washington State, Collins is surrounded by the beauty of nature, and it shows in her work. Before turning to the lathe, Collins laminates various exotic and domestic hardwoods with hand-dyed maple veneer to create these 2-in.-dia. by 2-in.-tall bowls. Each segmented vessel contains as many as 675 pieces and takes four to six hours to complete. The bowls are finished with lacquer. PHOTO: STEVE MELTZER

SARHA HOLT
Squamish, B.C., Canada

When designing this side table for a client's lounge, Holt tied together a number of elements. The newly updated room contained antiques, reflected in the slipper feet, and Asian accents, seen in the ebonizing and open framework. The table is 17 in. deep by 17 in. wide by 25 in. tall. Holt used water-based aniline dyes for the ebonizing and to deepen the color on the rest of the Honduras mahogany. She finished the table with shellac and wax.

ONE-BOARD BUILD-OFF

Last year, we announced *Fine Woodworking*'s first annual "Furniture Build-Off." The challenge was to use only 17 bd. ft. of wood (this time, maple)—the equivalent of one thick plank. *FWW* editors narrowed hundreds of excellent entries down to 24 semifinalists, and then turned over the judging to the public to pick the top three, who will each receive a prize package from Delta/Porter-Cable.

CHAD HILL
Fredericksburg, Va.
First place

Hill has been a woodworker for only two years. A fine arts major in college, he began a woodworking apprenticeship with cabinetmakers Mike Stockenberg and Mike Reiff and has been rapidly progressing ever since. When he saw the contest, Hill knew immediately that he wanted to make this demilune table (7½ in. deep by 33 in. wide by 23½ in. tall) with a detailed apron. The finish is lacquer. PHOTO: LARRY W. STONE

ROBERT GALUSHA
Kingman, Ariz.
Second place

This chair (34 in. deep by 24 in. wide by 38 in. tall) was designed to be visually delicate yet have considerable strength. Galusha used a combination of steam-bending and laminating to achieve the fluid curves of the chair. The floating seat slats are set into deep mortises and can flex downward with the weight of the occupant. The finish is tung oil and carnauba wax.

MIKE HARRIS
London, Ont., Canada
Third place

Harris took the opportunity to make this hall table (14¼ in. deep by 41 in. wide by 31¾ in. tall), a design he'd wanted to tackle for some time. Because he had never done inlay before, he said that was the most challenging and stressful part of the construction. The legs and top were dyed before receiving two coats of boiled linseed oil. Once the inlay was added, the top got another coat of oil, followed by shellac and spray lacquer.

Which blades for my bandsaw?

Q: If I start with only one blade for my bandsaw, what should it be? Down the road, what other blades should I buy?

—DEAN LARSON, St. Louis, Mo.

A: THE BEST MULTIPURPOSE BLADE for making solid-wood furniture is a ½-in.-wide, 3-teeth-per-inch (tpi), skip-tooth blade made of carbon steel. As the name implies, every other tooth is skipped, or missing. This leaves a large gullet between the teeth, which allows for very efficient sawdust removal when cutting thick stock.

The same blade also can be used to saw thin stock. Just use a piece of scrapwood as an auxiliary table over the throat plate and cut a little slower.

You also can use this blade to cut a radius as small as 2½ in., and even smaller if the back corners of the blade are rounded slightly with an old oilstone. This type of blade only costs about $8 and can be resharpened for about $3.50. I use BC Saw and Tool (www.bcsaw.com), where each order is custom made and the welds are uniformly excellent. A poor weld will compromise the performance of even the most expensive blade.

This first blade will cover 95% of your needs, but for tight curves, I'd favor a 3⁄16-in.-wide, 4-tpi skip-tooth blade because it will cut a radius as small as ⅜ in.

—Michael Fortune owns and uses six bandsaws in his studio near Peterborough, Ont., Canada.

JUST TWO

To make straight cuts, resaw lumber, and cut radii as small as 2½ in., use a ½-in., 3-tpi skip-tooth blade. A 3⁄16-in., 4-tpi skip-tooth blade will cut radii down to ⅜ in.

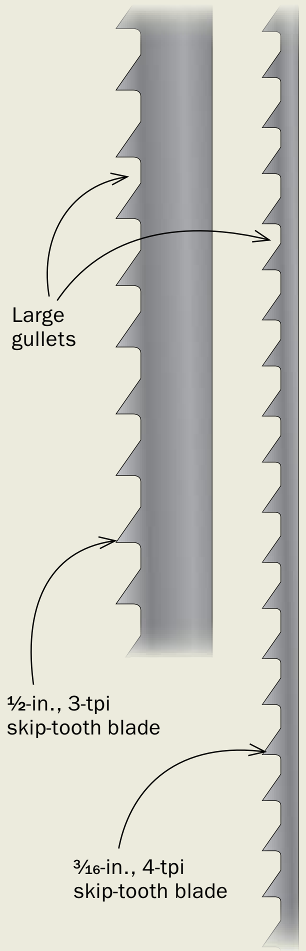

One blade for most bandsawing. *Large gullets are essential for clearing chips from tall resaw cuts.*

A second blade for tight curves. *A narrower blade will cut tighter curves, but large gullets are still essential for thick stock.*

Ask a question

Do you have a question you'd like us to consider for the column? Send it to Q&A, *Fine Woodworking*, 63 S. Main St., Newtown, CT 06470, or email fwqa@taunton.com.

Photos: staff; drawings, except where noted: Kelly J. Dunton

READER SERVICE NO. 112

READER SERVICE NO. 5

READER SERVICE NO. 26

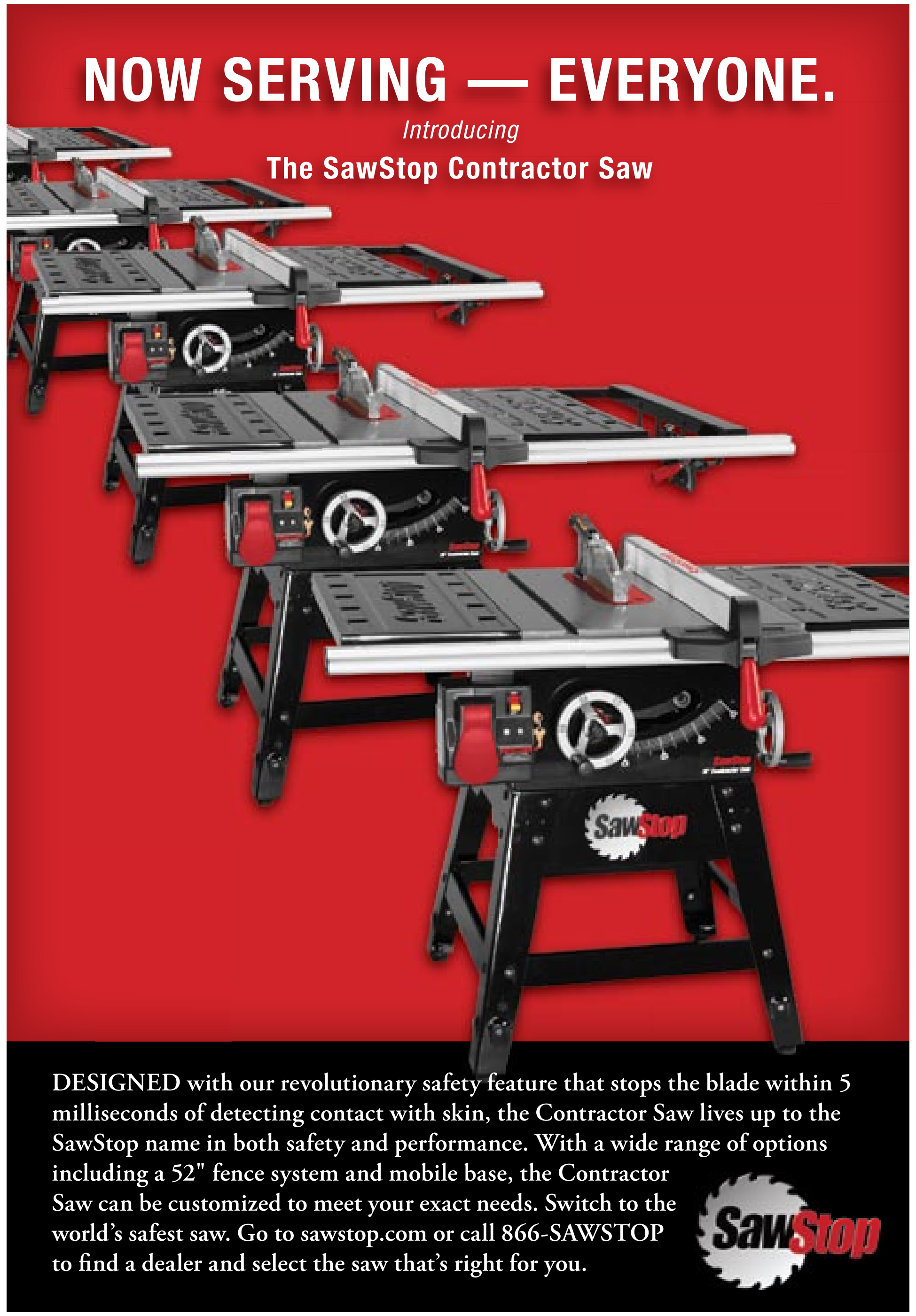

READER SERVICE NO. 19

Frame-and-panel door construction

Q: Every door I've seen was constructed in the same way. The stiles run through from top to bottom, and the rails are captured between them. Does this method of construction provide an advantage over a door with rails that run through from side to side with stiles captured between them? Is there a sound way to construct a door that way?

—CHARLIE WAELTZ, Mandeville, La.

A: I ASKED TWO OF OUR CONTRIBUTING EDITORS, Christian Becksvoort and Garrett Hack, this question. I learned there are several good reasons to go with tradition.

First, the continuous "backbone" of the stile in traditional construction makes the door stronger.

Second, a door with rails that run through from side to side creates three problems, all of which involve end grain.

Hinges are usually aligned with the rails: the top hinge with the bottom of the top rail, and the bottom hinge with the top of the bottom rail. If the rails run through and you drive a hinge screw ½ in. from the end of the stile, Becksvoort says, it will probably last "from 12 until noon, if it doesn't crack right away."

Also, the gap on the hinged side is predetermined and won't change over the seasons. So any expansion and contraction will take place toward the lock stile. If the door should swell and need to be planed down, it is much easier to plane a continuous stile, as opposed to having end grain exposed at the top and bottom.

Finally, if the hinge-side stile of a door with rails running through should shrink too much, the end grain of the rails will jut out and lever against the case frame when the door is opened and closed. That levering action could result in damage to the piece or the hinge.

—Matt Kenney is an assistant editor.

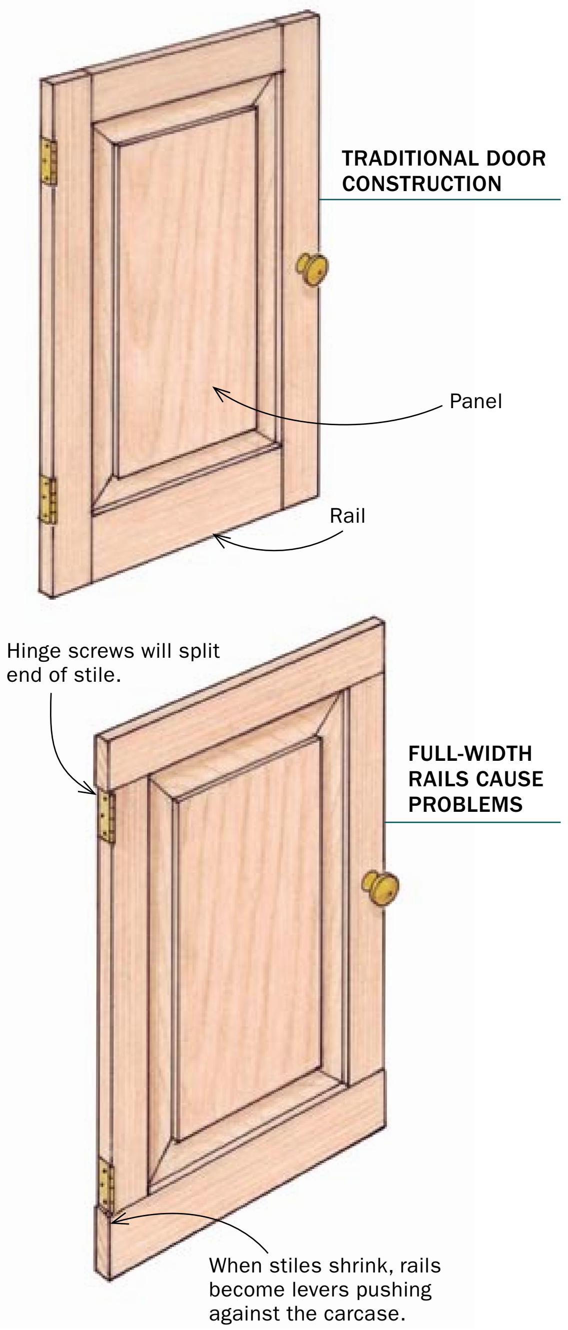

Composite decking for stickering lumber

Q: I want to air-dry some maple, and I have heard that it is prone to sticker stain. Would stickers made from plastic composite decking material prevent this problem?

—WILL RAULSTON, Charlotte, N.C.

A: STICKER STAIN, A TYPE OF MOLD, is caused by moisture trapped between a sticker and the board being dried. Maple is especially prone to mold growth, and so requires great care when being air-dried.

The key to preventing sticker stain is minimizing the amount of contact between the lumber and the sticker, and the amount of moisture in the sticker itself.

You can use composite decking, but keep your stickers less than 1½ in. wide. If you run out of decking material and have to use wood, make sure that it is thoroughly dried and keep these stickers less than 1½ in. wide, too.

Also, it's a good idea (but not necessary) to stack your maple vertically for three to 10 days before you stack it horizontally for drying. Place spacers between the boards, one at the bottom and one at the top. Secure the tops of the boards in some way to keep the spacers from falling down. This allows surface moisture to evaporate quickly, and helps prevent sticker stain.

—Richard Jones is a teacher, author, and furniture maker in Yorkshire, England.

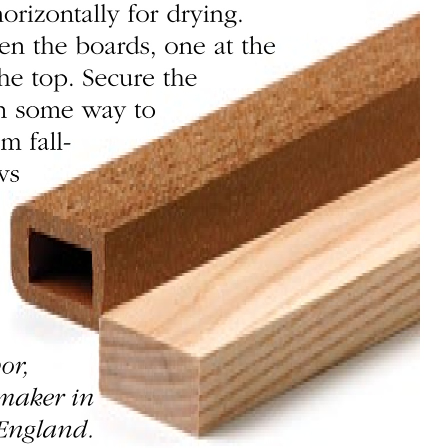

Drawings (this page): Vince Babak

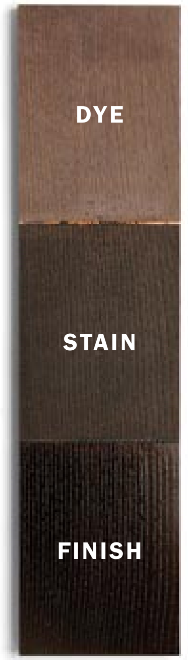

THE RIGHT SEQUENCE

How to ebonize oak

Q: I am trying to ebonize an oak table. I applied a solution of vinegar and steel wool to a sample board, but that turned the oak bright purple. I then applied a water-based black aniline dye. The oak turned a dull green. What have I done wrong, and what can I do to correct the color?

—BOB BLACK, Bellaire, Texas

A: DON'T JUDGE THE COLOR of a chemical stain or dye until you have applied several coats of finish, because the finish usually changes or deepens the color.

Apply an oil-based black stain (Minwax 2718) to even out the color. Then apply an amber-colored finish such as shellac, lacquer, or an oil-based polyurethane. The finish will counteract the green and purple hues caused by the chemical stain.

In the future, skip the chemical stain and just use the dye, pigment stain, and a clear finish coat.

—Jeff Jewitt is a frequent contributor of finishing articles to Fine Woodworking.

Dye first. *Use a water-based black dye as the base color.*

Stain second. *An oil-based black pigment stain (Minwax 2718) will deepen the color.*

When does a plane sole need flattening?

Q: I have several old cast-iron planes. I flattened their soles when I first got them, but wonder if they will ever need to be reflattened? If so, how often?

—ELIJAH EVANS, Columbia, S.C.

A: THE ONLY WAY TO KNOW a sole needs to be reflattened is to check it with a straightedge. Lay a steel ruler across the sole heel to toe, then side to side, and check for gaps. *How flat* the sole needs to be depends on the accuracy you expect from the plane. And *where* the sole is flat depends on what the plane is used for.

I touch up my planes every year or two, but I use them every day. If yours are used less often—say, just a few times each month—a decade might go by before they need to be reflattened.

—Garrett Hack is a contributing editor.

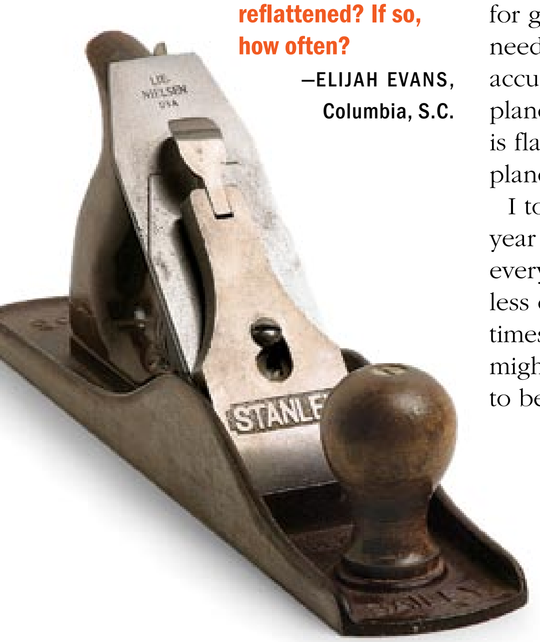

Rough sole for rough work. *A No. 5 jack plane like this doesn't need to be dead-flat, but it should be flat at least in front of the mouth.*

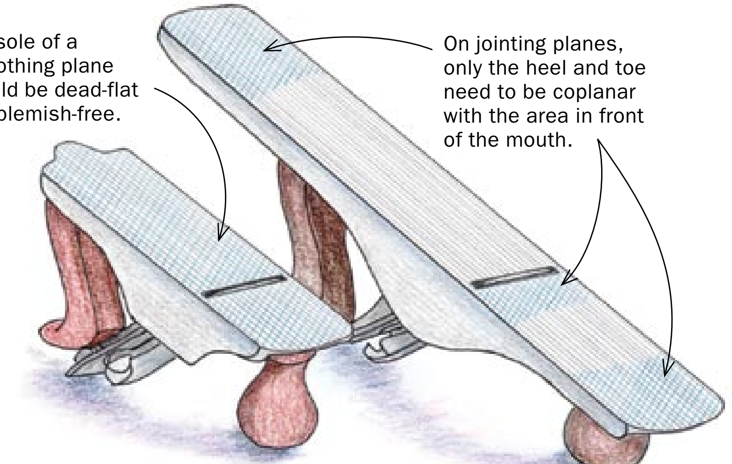

HEARNE HARDWOODS, Inc
Extraordinary Hardwood Lumber
www.hearnehardwoods.com
Internet Store
One of the Largest Specialty Lumber Yards in the World!
~ Over 100 species in stock!
~ Domestic & Exotic lumber
~ Specializing in Cherry, Walnut, European Lumber, Burls, Figured Hardwoods, Custom Flooring, Flitches, Wide Slabs & rare wood!
Call Toll Free!
(888) 814 - 0007
200 Whiteside Drive
Oxford PA, 19363
info@hearnehardwoods.com
READER SERVICE NO. 54

trend™
routing technology
For your local dealer or to buy on-line visit:
www.trend-usa.com
Tel: (270) 872 4674 Fax: (866) 204 5441
READER SERVICE NO. 114

www.osbornewood.com
OSBORNE Wood Products, Inc.
Since 1979, we've been supplying furniture makers and craftsmen with unique wood turnings, table legs, kitchen island legs, sofa legs and more!

4618 GA Highway 123 N
Toccoa GA 30577
Order Line: 800.849.8876
For a Catalog: 800.746.3233
info@osbornewood.com
Osborne Wood Products, Inc. has a large selection of wood components that can be easily ordered online at www.osbornewood.com
READER SERVICE NO. 113

Cabinet & Millwork Shops • Contractors • Remodelers
Design/Build Firms • Project Managers
Commercial & Residential Casework
The quality you demand. The service you deserve.
• Easily assembled, frameless cabinet boxes
• Storage & Closet Systems
• Custom-sized casework
• Drawer boxes
• Adjustable shelves
• Full overlay slab-style fronts
• Superb customer service
• Increased profitability
• Higher productivity
• Better cost control
• Consistent quality
For more information or to download a FREE digital catalog, please visit our website.
CabParts, Inc.®
Your Case Work Made Easy℠
www.cabparts.com
970-241-7682

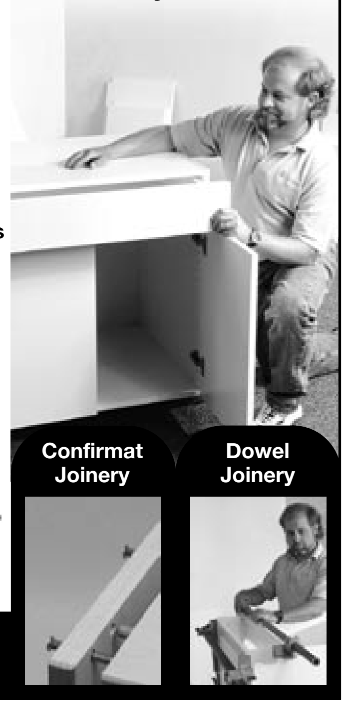

Confirmat Joinery
Dowel Joinery
READER SERVICE NO. 47

Carve a decorative fan

BY PHILIP C. LOWE

Cabriole legs may give a Queen Anne lowboy its signature grace, but the fan is its visual centerpiece.

The fan, which decorates the bottom center drawer of the lowboy (see pp. 62-69), was a popular element in Queen Anne furniture. It is a fairly simple relief carving that requires a handful of gouges and chisels.

I begin with the drawer front cut to size and its edge detail shaped. To lay out the fan, draw a baseline 1¼ in. from the bottom of the drawer front. From the center point of this line, draw a perpendicular line. Where these lines intersect, place the compass point and draw a half-circle the radius of the fan, a second one ¼ in. smaller, and a third circle with a ¾-in. radius.

Next, divide the semicircle into 12 equal pie-slice segments. You can use a protractor to mark the 15° segments, or you can use 45° and 30°-60°-90° drafting triangles anchored to a straightedge held parallel to the baseline. Make certain the scribe marks extend inside the smallest circle and beyond the largest one.

Broad strokes set the background

To begin carving, match a carving gouge to the radius of the inner hub.

Twelve easy pieces

Geometrically, the fan is essentially a pair of nested semicircles with the larger one carved into a dozen identical slices. Each slice is 15° wide.

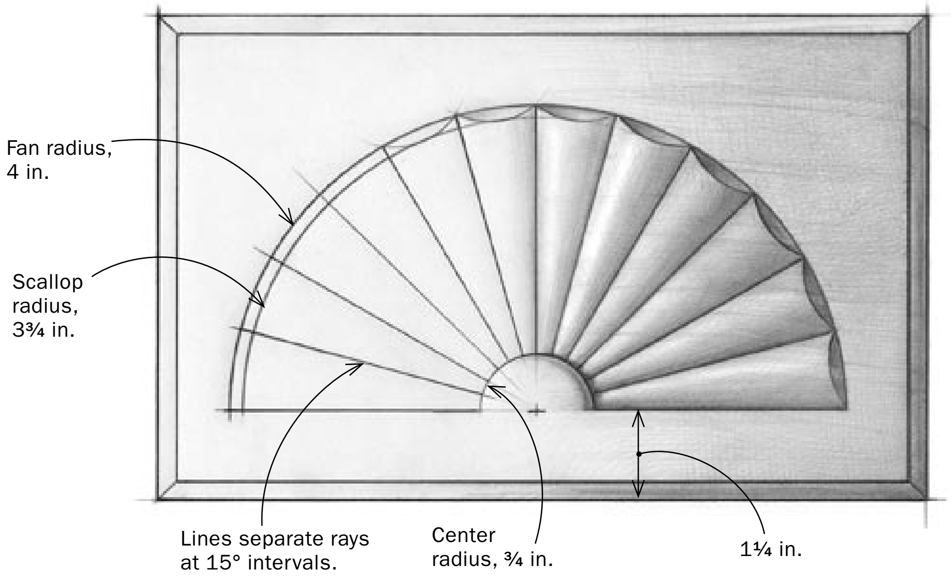

Draw the arcs and rays. *Use a compass to mark the perimeter of the fan, the inner boundary of the scalloped edges, and the hub (top). Use 45° and 30°-60°-90° triangles in combination to lay out the rays (above).*

Establish the outline

Begin the carving by establishing its boundaries. Scribed and chiseled lines help limit the travel of gouges and other tools.

The first cutting tool is a gauge. *Scribe the baseline on either side of the hub with a marking gauge. This creates a channel in which to register further cuts.*

Define the hub. *Use a gouge whose sweep matches the fan's inner radius. Vertical cuts about ¼ in. deep create a stopping point for gouges when carving toward the center of the work.*

Use a mallet to drive overlapping vertical cuts about ¼ in. deep. Also deepen the baseline on either side of the hub, using a straight chisel for cuts that are shallow at the outer arc but ¼ in. deep at the hub.

The fan's illusion of depth comes in part from the fact that the rays are recessed at the fan's hub and flush with the surface near the outer radius, so they project forward as they radiate outward. To achieve this, use a wide, flat gouge (I like a #3 or #5 sweep, 20 mm wide) to make a series of cuts from the outer area of the fan to the hub. These cuts should deepen to about ¼ in. deep at the inner circle. This series of cuts removes most of the layout lines. But because you drew them long, you can re-establish them before moving on to define the individual rays.

Deepen the baseline and relieve the background. *Make vertical cuts with a straight carving chisel along the baseline (left). They should slope from about ¼ in. deep at the center to the surface at the outer radius. Use a wide, shallow gouge to carve out the background (below). The cuts should start at the surface about ½ in. inside the second arc.*

Define and shape the rays

Begin this task by using a V-tool to cut a sharp trench along the segment lines that separate each ray (see p. 94). Next, use a back-bent gouge to round over the tops of the rays into the trenches you just cut. When making these cuts, particularly on the center rays, you'll be working at an angle across end grain that you exposed previously with the V-tool. To prevent tearout, cut in a direction that ensures that the fibers are supported from behind. This means working in opposite directions on opposing sides of each V-groove—toward the center on the top of each ray, away from the center on the bottom. You'll likely need a second

Photos: Steve Scott; drawings: Bob La Pointe

Shape the rays

Lowe uses a variety of gouges and chisels to separate the rays so that they stand out against the background.

Pick up your pencil again. *You erased some layout lines with the shallow gouge. You'll need them for the next step.*

Separate the rays. *Follow those newly redrawn lines with a V-shaped parting tool to furrow between the individual fan blades.*

Shaping comes next. *A back-bent gouge is ideal for rounding the beveled edges left by the parting tool. Blend the curves across the top of each ray. Avoid tearout by cutting in the right direction.*

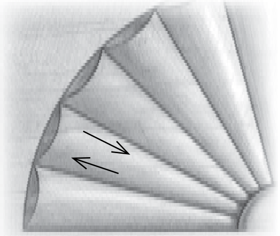

Work toward the center on the upper edge of the ray and away from the center on the lower edge.

pass to refine the shapes further and make the rays stand out in appropriate relief.

A trick for cutting scallops

I cut the scalloped shapes around the fan's outer edge with two gouges: a specially ground #2 sweep, 25 mm wide, for the vertical outside wall of each scallop and a #5 sweep, also 25 mm wide, for the inside. Start with the outside cuts. Tap the gouge in vertically to about ⅛ in. deep. Next use the #5 to make angled paring cuts that meet the first cut at its bottom.

To make these cuts intersect cleanly, I grind a shallow convex curve onto the end of the #2, so the bottom of its cut matches the radius of the #5. In this way, the second cut neatly severs the chip and creates a semicircular bottom. With the scallops done, the carving is nearly finished.

Use the back-bent gouge to round over the edge of the inner hub to a quarter-round profile. Once this is done, continue defining and refining the lines and shapes as needed, using your eye as a guide. The tool marks can be reduced by scraping and sanding to the desired texture. □

Cut the scallops

The rays are decorated with scalloped tips, throwing them into further relief and creating greater visual interest.

The last course is scallops. *Lowe uses a #2 gouge with a convex tip to establish the outer walls (left). Next, he pares from the center out with a #5 gouge to finish the cut cleanly (below).*

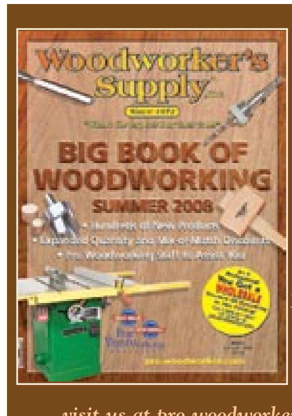

If you are in a woodworking business... this could be the most valuable tool in your office℠.
Please call 1-800-321-9841 for your 794 page catalog.
Mention code fwu08
FREE to woodworking businesses.
visit us at pro.woodworker.com/fwu08
READER SERVICE NO. 139

FREE Catalog!
High Quality Wood Parts for every project
800.843.7405
tablelegs.com
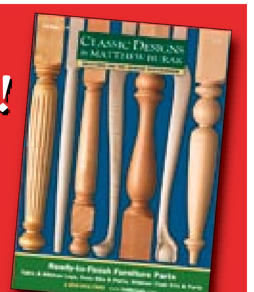
CLASSIC DESIGNS by MATTHEW BURAK
SOLUTIONS FOR THE PROFESSIONAL WOODWORKER
READER SERVICE NO. 90

Center for Essential Education
School of Woodworking
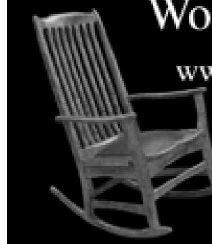
www.cfeeschool.com
(254) 799-1480
for full details
1-12 day foundational courses in woodworking and fine furniture making
READER SERVICE NO. 94

Operate 3-phase woodworking machines from single-phase!

• Immediate delivery
• Two year warranty
• True 3-phase output
• Whisper quiet operation
• No-charge tech support, 24-7
• Regulated output for CNC Machines
• The most capacity at the least cost, guaranteed!
• Protect your investment - Insist on Phasemaster®
• Visit us today at www.kayind.com
NEW! Turn-on 3-phase with wireless remote.
Kay Industries
PHASEMASTER® Rotary Phase Converters
General Offices
604 N. Hill St.
South Bend, IN 46617
800-348-5257
574-289-5932 (fax)
Western Region
4127 Bay St. #6
Fremont, CA 94538
510-656-8766
510-657-7283 (fax)
The World Leader in Single to Three-Phase Power Conversion
READER SERVICE NO. 135

DOWELMAX
PRECISION ENGINEERED MULTIPLE DOWEL JOINERY SYSTEM
GOLD MEDAL WINNER AT THE TOMORROW'S WORLD SCIENCE FAIR, LONDON, ENGLAND

This china cabinet was built with Dowelmax to create 60 precision hardwood dowel joints for the strongest and most accurate construction possible.
Our Unconditional Guarantee: Wood joints that are stronger than a mortise and tenon, and a joinery system that is more accurate and versatile than any other system on the market.
For more information, or to order call 1.877.986.9400 or log on to www.dowelmax.com
READER SERVICE NO. 142

WHEN YOUR PASSION TURNS TO PERFECTION
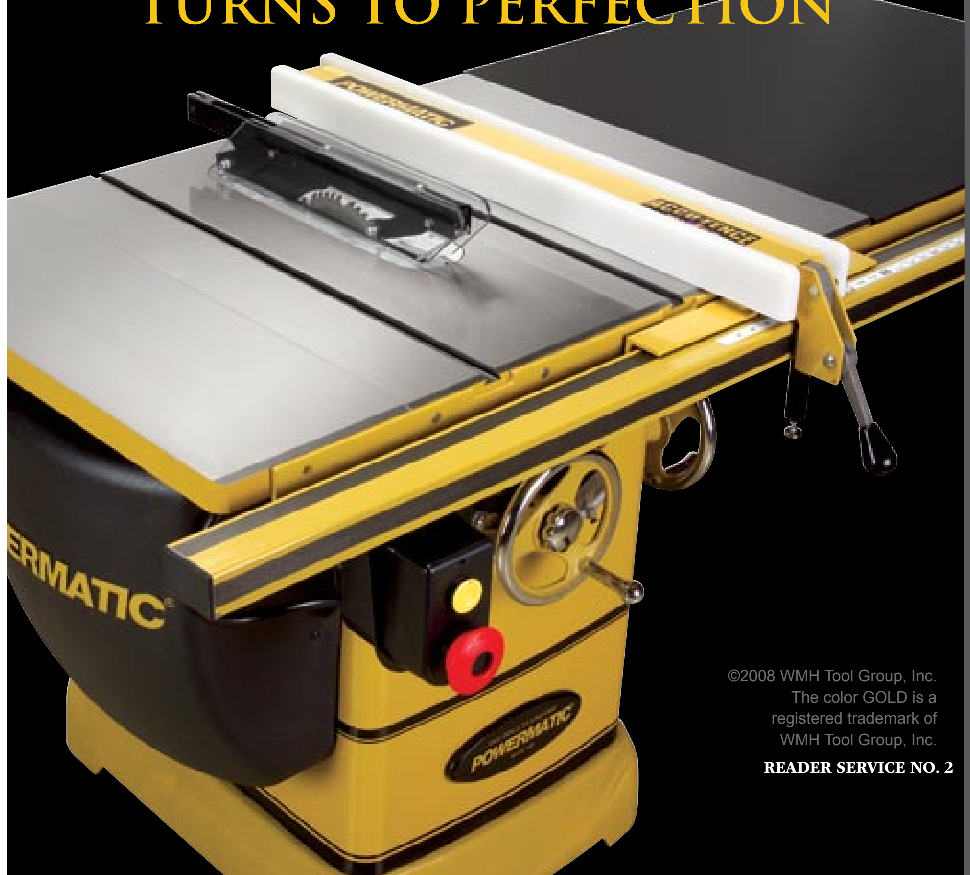
©2008 WMH Tool Group, Inc. The color GOLD is a registered trademark of WMH Tool Group, Inc.
READER SERVICE NO. 2

TURN TO POWERMATIC®
MODEL PM2000
The award winning PM2000 tablesaw sets a new standard for perfection with an array of innovative features including:
• Quick release riving knife
• Built-in retractable caster system
• Push button arbor lock
• Poly-V drive belt system
• Wide stance heavy-duty trunnion
• Industrial-duty Accu-Fence® System
To learn more about these features, visit your local quality Powermatic® dealer or:
www.powermatic.com/PERFECTION
THE GOLD STANDARD POWERMATIC SINCE 1921
The Gold Standard Since 1921™

dream it
then build it

Imagine precisely how you'd like your next woodworking project to look – with all the intricate details. Then find out exactly how to make it happen with a free trial subscription to FineWoodworking.com.

Videos Discover more than 450 videos from seasoned pros demonstrating woodworking techniques.

Gallery Explore over 1,000 pieces of furniture, including tables, chairs, desks and chests in our inspirational gallery.

Ask the Experts Get any of your questions answered quickly and completely by expert woodworkers.

14 DAY FREE TRIAL **FineWoodworking.com/tryit**

Find fresh ideas that click.

The Taunton Press
Inspiration for hands-on living®

©2008 The Taunton Press

RAZOR SAW
It cuts FASTER! EASIER! MORE ACCURATELY!

Order now, only $25.95 post paid!

Craftsmen around the world have discovered the secret of better quality work. The Razor Saw cuts by pulling and will give a cleaner, more accurate cut in half the time.

Purchase a RAZOR SAW now and we will include our 100 page catalog of the world's finest woodworking tools. Or send $2.00 for a two year subscription to our Catalog.

The Best handsaw for ALL woodworkers!
www.japanwoodworker.com
Dept D2

THE JAPAN WOODWORKER
1731 Clement Ave. • Alameda, CA 94501 • 1-800-537-7820

READER SERVICE NO. 136

Watch the MirrorCoat Application Video at www.systemthree.com

MIRRORCOAT
POURABLE, SELF-LEVELING BARTOP COATING
Pourable Perfection

SYSTEMTHREE
Helping you put it all together
Visit us at: www.systemthree.com

READER SERVICE NO. 144

Mortise Pal™

Turn your plunge router into a precision slot mortiser!

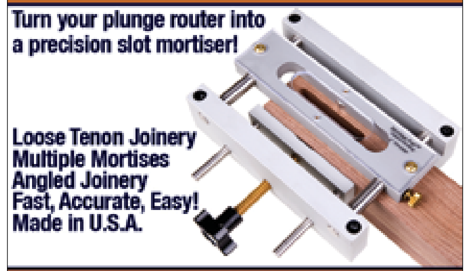

Loose Tenon Joinery
Multiple Mortises
Angled Joinery
Fast, Accurate, Easy!
Made in U.S.A.

WWW.MORTISEPAL.COM

Trend Airshield Pro

- A built-in quiet fan keeps a constant flow of filtered air across the face
- Provides excellent protection from inhalation of harmful dust with twin fine dust filters
- Optimum center of gravity for balance and comfort
- 8 hour Ni-MH battery includes charger

trend routing technology

Airware America
Call us or visit our website today!
800-328-1792
www.airwareamerica.com
Personal Service • Fast shipping
Keeping woodworkers safe for over 30 years

READER SERVICE NO. 97

INFINITY CUTTING TOOLS **NEW**

Professional Coping Sled
Item: COP-100

Sale: $129.90

877-USA-BITS
Visit infinitytools.com for the video

Get more out of your FEIN MultiMaster. Power it up with money-saving accessory packs.

FEIN. The oscillating tool experts.
Over the past 40 years FEIN has developed a wide range of MultiMaster accessories for many applications Our goal is simple: to improve the performance of your MultiMaster and to make any job you do easier, faster and better.

Use the right accessory for every job.
To make using your FEIN MultiMaster even better, we are pleased to offer multi-packs of our most functional blades. These five and ten-packs will make your MultiMaster more economical than ever.

FEIN MultiMaster. The universal tool for remodeling and renovation.

CUT THROUGH WOOD, DRYWALL AND PLASTIC OR PLUNGE-CUT A VENT OR SWITCH PLATE WITH THE 126 E-CUT BLADE.

THE UNIVERSAL BLADE SAWS THROUGH NAILS, SHEET METAL OR ALUMINUM PIPES PRECISELY AND EASILY, EVEN IN TIGHT SPACES.

UNDERCUT A DOOR JAMB, TRIM FLOORING AND BASEBOARD, EVEN AFTER INSTALLATION, WITH THE 127 E-CUT BLADE.

THE 144 HSS FLUSH CUT BLADE CUTS THROUGH STAPLES, PUTTY, FIBERGLASS AND MORE.

REMOVE OLD PUTTY FROM WINDOWS QUICKLY AND EASILY WITH THE 096 HSS ROUND SAW BLADE.

SAW INTO CORNERS WITHOUT OVERCUTTING WITH THE 106 HSS SEGMENT SAW BLADE.

Find out more, get a free DVD or brochure, or find a dealer near you. Call **1-800-441-9878** or visit us online at **www.feinus.com.**

READER SERVICE NO. 66

Finishes for foodware

BY MIKE MAHONEY

At college, my industrial arts professor cautioned me many times about the harmful finishes I was using for my wooden bowls. Specifically, he stressed that oil finishes with metallic dryers were dangerous for food contact. Now that lead has been banned as a drier, studies have shown that almost all finishes are benign to humans: Ingesting fully cured finish is similar to eating a piece of plastic—the body won't digest it.

If safety is no longer an issue, how do you decide which finish to use? From the many finishes available, you should base your choices on durability, ease of application and repair, and the intended use of the piece.

Penetrating oils are easily renewable

For wooden items that will get constant wear and tear in the kitchen (for example, salad bowls, plates, spatulas, and butcher blocks), penetrating oils are the preferred finish. They are the easiest to apply, and the ability to reapply them easily will keep your work looking great year after year.

With penetrating finishes in particular, you need to carefully sand away any tool marks. For a turned piece, sand it on the lathe, sanding in both directions if the lathe has a reversing switch. It also helps if you raise the grain with water and let the piece dry before giving it a final sanding.

The two most popular oils are boiled linseed oil and tung oil. They are both curing oils and will slowly harden in the wood, reducing the need for reapplications. Boiled linseed oil is cheaper and more widely available, but it has a tendency to yellow the wood more than other oils. Pure tung oil gives a little more water protection but is harder to rub to an even sheen. Oil/varnish blends such as Danish oil, if heavily diluted and thinly applied, are easy to apply and repair. Just don't apply so many coats that you start to build a film, as this will break down and be hard to repair.

Nut oils, such as walnut, macadamia, and almond, are more expensive and will cure more slowly and only partially. Mineral oil is widely available in drugstores and forms no film or sheen no matter how many coats are applied, but it also requires more frequent renewal.

I don't recommend using olive or vegetable oils for finishing. These oils will not cure at all; they can go rancid under the wrong conditions; and if kept in a closed, oxygen-deprived area, or if too much finish is applied, the piece can become sticky.

Regarding the objection that oil finishes don't offer any resistance to abrasion, my contention is that if you're using a wooden item to serve food and are worried about staining or scratching the wood's surface, you may be better off using ceramic, plastic, or glass. The lack of a moisture barrier is not important for foodware, as wood naturally absorbs and evaporates moisture. I have been using wooden butcher blocks, bowls, and dinner plates in my house for nearly 20 years and they look better than the day they were made—stains, cut marks, scratches, and all.

Film finishes: Instant appeal but problems down the road

There is no denying the eye-catching shine that a film finish can give to a piece. However some topcoats, such as lacquer, shellac, and waxes, while easy to apply, aren't durable enough for items that get

Careful sanding is needed

Sand thoroughly. *Oil finishes don't hide poor sanding, so work your way up to P400 grit. If your lathe has a reversing switch, sand while the workpiece is going in one direction and then the other to better shear the fibers.*

Raise the grain. *You'll get a smoother surface if you raise the grain with water, let it dry, and then sand the wood again.*

Final sanding. *Give the workpiece a final sanding by hand using P400-grit sandpaper.*

Expect wear and tear? Use oil

Pour on the oil. *Boiled linseed oil is a good penetrating oil. Flood the surface and use a disposable brush to ensure uniform coverage.*

Sand in the oil. *Another way to apply oil is to place a few drops on a foam-backed sanding pad chucked into an electric drill (left), and then sand it into the wood with the workpiece slowly turning. This deepens the penetration and brings out any curl.*

Use oil/varnish mixes sparingly. *You can use oil/varnish mixes and wiping varnishes as penetrating-oil finishes, but don't apply too many coats or you'll build up a film, which is hard to repair.*

Renewable mineral oil. *Because it never forms a film, no matter how many coats you apply, mineral oil is easy to use. But it has to be renewed frequently.*

Photos: staff

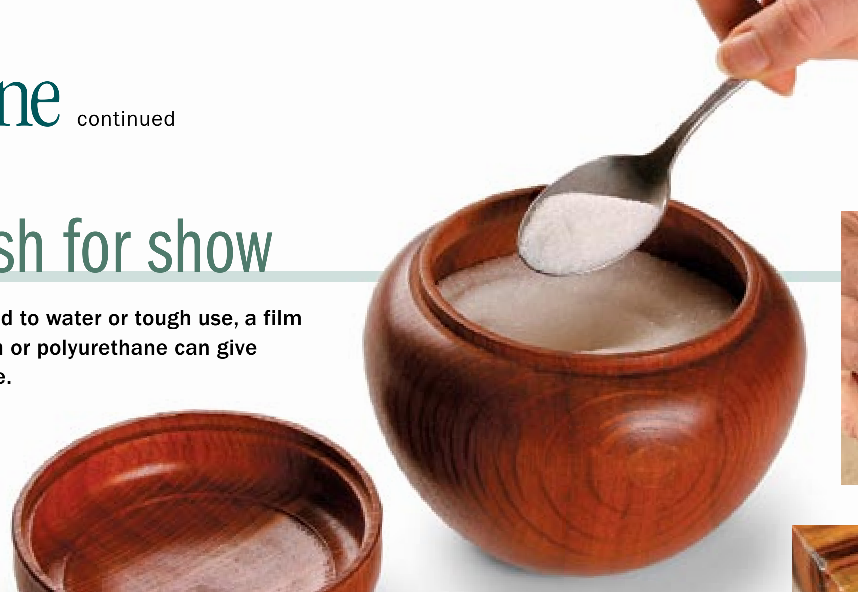

Film finish for show

On pieces not exposed to water or tough use, a film finish such as varnish or polyurethane can give many years of service.

regular use and need to be cleaned occasionally. These finishes may be relatively easy to repair if damaged, but eventually you'll get tired of doing so.

The case for or against using varnishes is more complicated. Many wooden foodware items such as spoons, rolling pins, butcher blocks, and mortars and pestles are rubbed, washed, knocked, cut on, and pounded in everyday use. A tough surface film would seem ideal to stand the rigors of time. But when a varnish or polyurethane breaks down and especially if water penetrates it, it is much harder to repair.

However, these tough film finishes may be quite appropriate for objects that contain dry goods, such as sugar bowls or lidded boxes for cookies. These items rarely receive any abrasion, and usually need dusting only. Therefore the membrane will take many years of wear.

Since oil/varnish finishes are very slow to dry, their odor can linger, sometimes for months. This is especially true on lidded containers. I would not let food be in contact with this finish until the odor has completely dissipated. Instead of waiting, you can either leave the inside unfinished or finish it with quick-curing shellac.

Dull the shine. *If you don't want the plastic look of a gloss film finish, rub out the final coat with 0000 steel wool.*

WARNING

Tough to repair. *Film finishes eventually will break down. Once water gets under them, they are almost impossible to repair.*

No finish at all

Natural wood. *Mahoney has a collection of unfinished foodware that still looks great after a decade of use.*

A few tips for preserving woodenware

A third choice is the finish left by sandpaper—in other words, no finish at all. The wooden plates I use in my kitchen have never had a finish. They are 12 years old and are barely broken in yet. A closed-pored wood such as maple, cherry, or birch is best.

However, there are some secrets to letting woodenware age gracefully. When washing these items, do not leave them in standing water; use mild dish soap, scrub gently, and rinse. Then either dry the piece with a towel or let it air-dry.

Never put wooden items in the dishwasher or the microwave. Some timbers, especially fruitwoods, are also sensitive to cold and may crack if refrigerated. □

The best woods for foodware

The best woods for the kitchen and dining room are what I call the soft hardwoods. These include maples, cherry, walnut, ash, birch, poplar, and sycamore. These timbers are flexible and shock resistant. In contrast, the hard hardwoods such as locust, rosewoods, hickory, and Osage orange will shatter if dropped or knocked and won't last very long in the kitchen. White oak is the exception: Tough yet flexible, it makes excellent foodware. Red oak, on the other hand, is too porous.

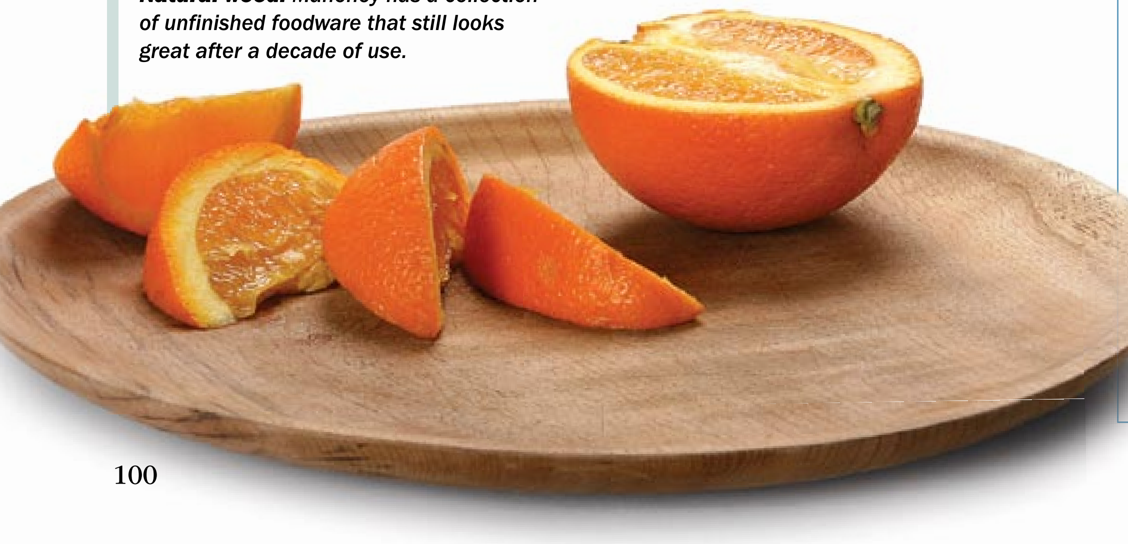

Custom Dovetail Drawers
by Eagle Woodworking

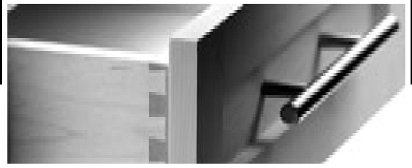

Trust us to create and deliver the finest quality custom dovetail drawers.
Call: 800-628-4849 EagleDovetailDrawers.com

Banner Hill School Of Fine Woodworking
Woodworking classes for all skill levels.
For further information please contact us at:
Banner Hill School of Fine Woodworking
P.O. Box 607 ~ Windham, NY 12496
(518) 929-7821
www.BannerHillLLC.com

COOK WOODS
cookwoods.com
TOLL FREE 877.672.5275
110 Species of Exotic and Domestic Instrument Sets, Lumber and Blocks

Gemini CARVING DUPLICATOR
"The Professional's Woodworking Secret"
- FAST
- RUGGED
- ACCURATE

VISIT OUR WEBSITE
www.wood-carver.com
service@wood-carver.com
315.252.2559
ALLRed 321 Route 5 West Elbridge, NY 13060 fax: 315.252.0502
CONTACT US INFORMATION KIT AVAILABLE

Old English Academy of Fine Woodworking
Michael J. Gray Master
Learn from an Old World Master the Fundamentals & Eruditions of Fine Woodworking
Hands on Instruction for Groups & Individuals
Weekend Classes Year Round
P.O. Box 772 Selmer, TN 38375
www.oefcc.com

Oregon Black Walnut
GOBY WALNUT PRODUCTS
5315 NW St. Helens Rd.
Portland, OR 97120
(503)-477-6744
Wide lumber - 4/4 through 16/4
Turning - Carving Stock
Gunstocks - Veneer
Instrument Grade Lumber
No Minimum Order
Web Site: www.gobywalnut.com

THE FURNITURE INSTITUTE of MASSACHUSETTS
Study with *Fine Woodworking* author Philip C. Lowe • Classes range from 1 day to 1 week to 2 and 3 year mastery programs.
• See new class schedule on:
(978) 922-0615 www.furnituremakingclasses.com

GILMER WOOD CO.
Quality Domestic & Exotic Lumber
• Logs, blanks, squares
• Over 50 species in stock
• Thin woods, Assortments, Books
• Musical Instrument woods
Phone 503-274-1271
2211 NW St. Helens Rd, Portland OR 97210
Fax 503-274-9839 www.gilmerwood.com

The New Generation of Bar Clamps

New!
• Clamp
• Hoist
• Jack
• Levels
• Rulers
• Adjustable 13" Throat
Proudly Made In The USA
Lowell Thomas Tool, Inc.
www.AlphaClamps.com

Our name says it all . . .
woodfinder
Over 400 suppliers!
35 ways to search!
www.woodfinder.com
SINCE 1999

mafell
KSS 400 6-5/16" Cross-Cutting System

-Powerful 120v motor
-saw attached to rail for quick cutting
-cuts up to 45 degrees
TIMBERWOLF TOOLS
800-869-4169
timberwolftools.com

WOOD RIVER VENEER
Architectural, Cut to Size & Specialty Panels, Tabletops, Doors & Veneer
(800) 875-7084
www.woodriverveneer.com

The Beall TILTBOX
Accurately reads relative angles
Also gauges actual level
Magnets on the sides cling to metal surfaces.
THE BEALL TOOL CO.
1-800-331-4718 Fax 1-740-345-5880
www.bealltool.com Dpt. FW

ADJUSTABENCH
RAISE YOUR WORK TO A NEW LEVEL
The Noden Adjust-A-Bench is the ergonomic solution for your workshop. Made of steel, it is solid in all positions. Need an assembly table? Drop the Adjust-A-Bench to its lowest position. Routing dovetails? Raise it up. You're always comfortable, regardless of the task.
Leg sets and accessories to retrofit your existing bench or complete workbenches available.
www.adjustabench.com 609-882-3300

Arbor Day...A Great Idea Grows
In 1872, J. Sterling Morton gave the world a great idea. He created a holiday unlike any other, Arbor Day.
This year, plant Trees for America. For your free brochure, write: Trees for America, The National Arbor Day Foundation, Nebraska City, NE 68410.
The National Arbor Day Foundation
www.arborday.org

Introducing our new TW chisels.
Made in Germany to the Highest Standards.

TRADITIONAL WOODWORKER
For more information or a free catalog:
www.traditionalwoodworker.com•1-800-509-0081

INTERNATIONAL YACHT RESTORATION SCHOOL
Launch a Boatbuilding Career
Learn to build, restore & maintain classic wooden boats in our full-time program. Shorter-term continuing education courses in woodworking, marine systems, & metalworking are also available.

Newport, RI
401.848.5777 x203
www.iyrs.org
IYRS

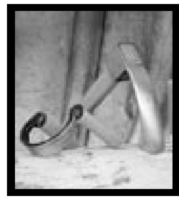

BARR SPECIALTY TOOLS
www.barrtools.com
1-800-235-4452
CALL FOR FREE CATALOG

Groff & Groff Lumber
Exceptionally Fine Furniture & Instrument Grade Woods
PREMIUM WALNUT, CHERRY, CURLY CHERRY, BIRDSEYE AND TIGER MAPLE
Sawmill Direct • Slabs to 40" Wide • 75+ Unusual Native & Imported Species • Matching Flitches • Burls & Turning Blocks
Order 75 Domestic and Imported Species 4/4 -16/4 • Custom Flooring & Wainscotting • No Order Too Large or Too Small
858 Scotland Road, Quarryville, PA 17566
www.groffslumber.com
1-800-342-0001 • 717-284-0001 • Fax 717-284-2400
National & International Shipping

Connecticut Valley School of Woodworking
Learning by Doing
Hands-on woodworking & furniture making classes for all skill levels— Nights, weekends & week-long classes

249 Spencer St.
Manchester, CT 06040
860.647.0303
www.schoolofwoodworking.com

TOP-RATED SEA KAYAKS
Rugged, Ultra-Light, Beautiful
Leader in Kayak Kits Since 1986
PYGMY BOATS INC

CALL OR WRITE FOR OUR FREE COLOR CATALOG:
(360) 385-6143, P.O. Box 1529, Dept. 98
Port Townsend, WA 98368
www.pygmyboats.com

Diefenbacher Tools
800 • 326 • 5316
Free Hand Tool Catalog
www.diefenbacher.com

lmii.com
• Fine woods and parts for instrument makers
• Customizable Guitar Kits
• Specialty tools and finishing supplies found nowhere else.
• Helpful Staff...Quick Delivery
800-477-4437
LUTHIERS MERCANTILE INTERNATIONAL, INC.

OVER 10,000 BOARDS ONLINE!
SHOP OUR ONLINE STORE TODAY!
www.nwtimber.com
NORTHWEST TIMBER
EXCELLENCE INGRAINED
1-800-238-8036
Jefferson, Oregon

Build Your Own Windsor Chair
Beginner to advanced 3 Day weekend classes
Taught at your local Woodcraft store
(614) 258 - 1546
www.colonialchaircompany.com
Colonial Chair Company

curiouswoods.com
SUPERIOR QUALITY HARDWOODS... FOR SUPERIOR RESULTS.
Curious Woods
Save 5% on your next order.
Use promo code: FW5 at online checkout
Small to Truckload Quantity Orders • Secure Online and Phone Ordering • Personal Service Is Our Specialty!
Hand selected native and imported hardwoods, turning stock, burls, plywood, veneers, flooring and fine finishing oils.
VISIT OUR STORE - ROUTE 67, BALLSTON SPA, NY

FLEX MOULDING, INC.
Over 1500 Moulding Styles Available
Hundreds of Architectural Ornaments
Specializing in flexible moulding, Simulated Carvings and architectural ornaments both Standard and Custom.
www.flexiblemoulding.com
800 307 3357 • Made In USA

Sauers & Company Processed Veneers
Veneer Sheets
Edgebanding
Inlays
Exotic, Domestic & Dyed Veneers
We Welcome Architects & Designers
www.sveneers.com 336-886-4716

New England's Largest Selection of Unique Lumber and Burls
Specializing in
Slabs up to 6' wide
3 buildings with over 1000 bins of the finest domestic and exotic lumber and burls for you to personally select

Berkshire Products, Inc.
Route 7A, Sheffield, MA 01257
413-229-7919
www.BerkshireProducts.com

accurate and tear out free
system/shelf pin holes in all materials
with your plunge router **professional appearance**
32mm European system or traditional 1" centers
MEG PRODUCTS
phone/fax 609-587-7187
9 John Lenhardt Road
Hamilton Square, NJ 08690
www.megproducts.com

FINE FURNITUREMAKING
College *of the* Redwoods
Accepting Applications: March 1–31
440 Alger Street
Fort Bragg, CA 95437
707 964-7056
www.crfinefurniture.com

Rosewood/Jatoba Block Plane
with A-2 Steel or Carbide Blade

BlumToolCo.
UNIQUE DESIGNS FOR QUALITY TOOLS
406 Pearl Street, Walnut, IA 51577
1-800-521-5458
Bench & Block Planes, Sharpening Jigs, Workbenches, Scraper Planes & More
www.blumtoolco.com

THE NORTHWEST WOODWORKING STUDIO
A School for Woodworking

Workshops and Classes
Portland, Oregon 503.284.1644
www.northwestwoodworking.com

St. James Bay Tool Co.
#271 Router Plane
$34.95+s/h
800-574-2589

stjamesbaytoolco.com

Laugh, learn and laugh again as you watch two of the funniest internet personalities demonstrate your favorite tools online.
ALL ABOUT TOOLS LIVE!
www.allabouttoolslive.com
The Nation's first fully interactive live tool show on the net

cabinetparts.com
Leading Internet Distributor of Cabinet Hardware & Accessories
Next Day Shipping
All major brands

Vast selection
Cabinet Hardware
Hinges - Drawer Slides
Locks - Knobs & Pulls - Lighting
Veneers - Laminates and more

Philadelphia Furniture Workshop
Hands-On Instruction; All Levels
Mario Rodriguez, Artist in Residence
www.philadelphiafurnitureworkshop.com
215-849-5174

Dovetail – Tenon – Carcass Saws
Adria

AUTHOR'S BEST OVERALL CHOICE
FWW #183
Page 64
www.AdriaTools.com

NEW ONLINE STORE
Shop for Figured Hardwood Lumber at:
www.PINECREEKWOOD.com
Sawyers of Figured Maple, Claro Walnut and Exotic Hardwoods since 1986
Pine Creek Wood Co.
Friend, OR. (541) 467-2288

DIMITRIOS KLITSAS
LEARN WOOD CARVING
Learn the skills to be a wood carver with a European master. From basic to advanced levels in two week programs. Visit our website for more info about our class schedules.
Fine Wood Sculptor
(413) 566-5301 • Fax: (413) 566-5307 • www.klitsas.com

HARDWOODS
Lumber • Veneer • Turning Stock
exoticwoods.net
800.423.2450
Wood Descriptions • Secure Online Ordering
WOODWORKERS Source
18115 N. Black Canyon Hwy. • Phoenix, AZ 85023
645 W. Elliott Rd. • Tempe, AZ 85284
3441 S. Palo Verde • Tucson, AZ 85713

Pocahontas Woods
Woodworking Vacations
in the beautiful Allegheny Mountains
www.pocahontaswoods.com ▪ (304) 799-6985
POCAHONTAS COUNTY
West Virginia
Nature's Mountain Playground
PocahontasCountyWV.com 800.336.7009

www.brandingirons.net
CUSTOM BRANDING IRONS
HIGH QUALITY ENGRAVED BRASS DIES
FREE BROCHURE AND SAMPLE BRANDS
Engraving Arts sales@brandingirons.net
PO Box 787 Phone: 800-422-4509
Laytonville, CA 95454 Fax: 707-984-8045

WOOD PORN
www.talaricohardwoods.com
Tel: 610-775-0400
WOOD, AS GOOD AS IT GETS
TALARICO HARDWOODS

“We specialize in the finest examples of domestic and exotic veneers as well as burls, crotches and highly figured woods.”
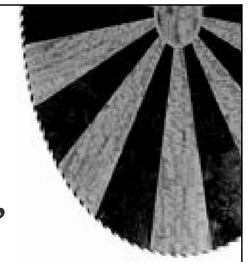
berkshire veneer COMPANY INC
Selling The World's Finest Veneers Isn't Our Job, *It's Our Pleasure.*
29 LOCUST HILL ROAD | GREAT BARRINGTON, MA 01230 | info@berkshireveneer.com
TOLL FREE: 1-877-836-3379 | FAX: 413-644-9414

BOW ARM MORRIS CHAIR
Introducing the finest plan on the market today! Pages of directions and 36 by 48 CAD generated plan.

This chair has won awards across the country and has become a part of American History, and is a easy project to build. The foot stool is included in the drawing!
FREE CATALOG
With over 125 Great furniture plans!!!
AMERICAN FURNITURE DESIGN
P.O. BOX 300100 ESCONDIDO, CA 92030
BOW ARM MORRIS CHAIR $19.95 + $5.00 SH
760 743-6923
www.americanfurnituredsgn.com

Keep your *Fine Woodworking* back issues looking brand new.

Store your treasured copies of *Fine Woodworking* in slipcases for easy reference again and again! Bound in dark blue and embossed in gold, each case holds more than a year's worth of *Fine Woodworking*. Only $8.95 ($24.95 for 3, $49.95 for 6).
Plus shipping and handling. Payable in U.S. funds.
To place an order using your credit card, call **1-800-888-8286**. Outside the U.S. and Canada call 1-203-426-8171.

HARDWOOD MOULDINGS
THOUSANDS of profiles
ANY Length • ANY Specie
256-pg Moulding Catalog $40 + $10 s&h
M.L. CONDON COMPANY Inc.
Call for a FAST, FREE QUOTE
248 Ferris Avenue, White Plains, NY 10603
Phone: (914) 946-4111 • Fax: (914) 946-3779

CraftsmanStudio.com
Fine Tools - Fair Prices - Fast Shipping
Radius Cutter
Lie-Nielsen Toolworks
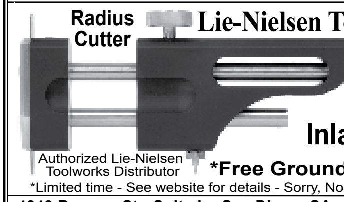
New Inlay Tools
Authorized Lie-Nielsen Toolworks Distributor
*Free Ground Shipping
*Limited time - See website for details - Sorry, No phone orders
4848 Ronson Ct • Suite L • San Diego, CA 888-500-9093

GOOD HOPE HARDWOODS, Inc.
“Where Fine Woodworking Begins”
4/4-24/4 Custom Cut Wide Matched Sets
Custom Flooring Available
Specializing In:
Figured & Plain Cherry, Walnut & Claro Walnut,
Tiger Maple & 58” Wide Bubinga
Plus Many Other Species
1627 New London Rd., Landenberg PA 19350
Phone 610-274-8842/Fax 610-255-3677
www.goodhope.com
We Provide Personalized Service

WINDSOR CHAIR WORKSHOPS
Learn Traditional Windsor Chair Techniques, NO KITS!
Call for Class Schedules
Jim Rendi, Tel: 610-689-4717
www.philadelphiawindsor.com

BEST DOVETAILS
It's the truth.
Order your Keller Dovetail System now!
(800) 995-2456
Made in the USA since 1976 • DVD/Video $8.95 + $2 p/h
www.bestdovetails.com

TIMBER WOLF™
Band Saw Blades

Swedish Silicon Steel ~ 1/8" - 2"
www.timberwolfblades.com
Free Catalog ~ 800-234-7297

CraftWood
Real Wood Wallcovering
Applies directly to drywall
ASTM E-84 class A fire rated
Wide variety of stainable species
Covers columns and doors
Ships in 3 weeks or less
World friendly
SRWOOD
812-288-9201
812-288-5225 fax
www.srwoodinc.com
FSC

Furnituremaking Workshops
Jeff Miller, director
Small, hands-on classes
Masterful instruction
1774 W. Lunt Avenue
Chicago, IL 60626
773.761.3311
www.furnituremaking.com

GUILLEMOT KAYAKS
WOODEN BOAT PLANS BY NICK SCHADE

WWW.KAYAKPLANS.COM/F

European Woodcarving
Instruction & Supplies
Visit our website for upcoming classes, tips and specials
www.norahall.com
970•870•0116

When Only The Finest Veneer Will Do...

Certainly Wood
Phone: 716-655-0206 Fax: 716-655-3446
www.certainlywood.com

THE VERMONT WOODWORKING SCHOOL
TRADITIONAL INSTRUCTION IN THE MOUNTAINS
INTENSIVES AND WORKSHOPS OFFERED IN OUR MODERN SHOP IN THE RED BARN.

STUDENT HOUSING AVAILABLE.
802-654-7467
WWW.VERMONTWOODWORKINGSCHOOL.COM

PECK TOOL
SUPERIOR QUALITY SINCE 1929

FREE CATALOG AT WWW.PECKTOOL.COM

AFRICAN EXOTIC HARDWOODS
- BEST PRICES - DIRECT FROM SOURCE
- EXOTIC LUMBER, BLANKS, BURLS, AND SLABS
- LARGE OR SMALL ORDERS WELCOME
- SHIPPED PROMPTLY NATIONWIDE

ASK ABOUT SAMPLE KITS
CONTACT FABS OR JASON TODAY (828) 658-8455 TEL.
CORMARK INTERNATIONAL (828) 645-8364 FAX.
181 REEMS CREEK ROAD, WEAVERVILLE, NC 28787

We make the world plane
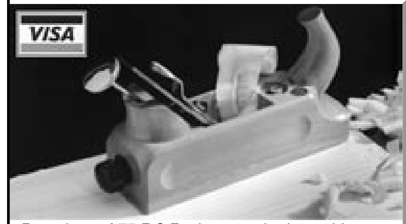
For prices of 75 E.C.E. planes and other cabinet-maker's tools, write: David Warren Direct, 7317 Chesterfield Rd., Crystal Lake, IL 60012 or call 800-724-7758. Dealers invited. View tools online at **www.ecemmerich.com**
We also make it fancy

NORTHWEST SCHOOL of WOODEN BOATBUILDING
Port Hadlock, WA
360-385-4948
VISIT OUR WEBSITE
www.nwboatschool.org
Now offering a COMPOSITE wooden boat building
Associates Degree in Occupational studies*
Waterfront campus
*Accredited School, ACCSCT

INDEX TO ADVERTISERS

Use reader service card at page 87.

For quick access to their websites, go to ADVERTISER INDEX at www.finewoodworking.com

Reader Service No. ADVERTISER, *page #*

12 Adria Toolworks, Inc., *p. 104*
97 Airware America, *p. 97*
9 Allabouttoolslive.com, *p. 104*
71 Allred & Associates, Inc., *p. 102*
4 Amana Tool Company, *p. 29*
42 American Furniture Design, *p. 104*
21 Ball & Ball Reproduction Hardware, *p. 25*
121 Banner Hill School of Woodworking, *p. 102*
Barr Specialty Tools, *p. 103*
57 The Beall Tool Co., *p. 102*
Berea Hardwoods, *p. 3*
72 Berkshire Products, *p. 103*
Berkshire Veneer Co., *p. 104*
137 Blum Tool Co., *p. 103*
51 Bostitch, *p. 21*
117 Burgess Edge, *p. 18*
22 C.R. Onsrud, *p. 23*
91 Cabinetparts.com, *p. 104*
47 CabParts, *p. 91*
122 Cadex Tools, *p. 27*
CarveWright, *p. 23*
Center for Furniture Craftsmanship, *p. 25*
14 Certainly Wood, *p. 105*
30 Chesapeake Light Craft, *p. 29*
90 Classic Designs by Matthew Burak, *p. 95*
141 College of the Redwoods, *p. 103*
Colonial Chair Co., *p. 103*
Colonial Williamsburg 2009, *p. 15*
70 Connecticut Valley School of Woodworking, *p. 103*
33 Cook Woods, *p. 102*
20 Cormark International, *p. 105*
131 Craftsman, *p. 11*
132 Craftsman, *p. 13*
125 The Craftsman Gallery, *p. 9*
88 Craftsman Studio, *p. 105*
69 Curious Woods, *p. 103*
David Warren Direct, *p. 105*
45 Diamond Machining Technology, *p. 27*
10 Diefenbacher Tools, *p. 103*

11 Dimitrios Klitsas, *p. 104*
5 The Dogwood Institute, *p. 87*
142 Dowelmax, *p. 95*
43 Dura-Grit, Inc., *p. 33*
78 Eagle Woodworking, *p. 102*
Engraving Arts, *p. 104*
66 Fein, *p. 97*
92 Felder Group USA, *p. 27*
FineWoodworking.com, *p. 96*
77 Flex Moulding, Inc., *p. 103*
108 Forrest Manufacturing, *p. 20*
63 The Furniture Institute of Massachusetts, *p. 102*
38 Furnituremaking Workshops, *p. 105*
31 General Manufacturing Co., Ltd., *p. 29*
65 Gilmer Wood Company, *p. 102*
29 Goby Walnut Products, *p. 102*
138 Good Hope Hardwoods, *p. 105*
40 Gorilla Wood Glue, *p. 20*
73 Groff & Groff Lumber, *p. 103*
96 Guillemot Kayaks, *p. 105*
127 Hartville Tool Woodworking, *p. 25*
54 Hearne Hardwoods, Inc., *p. 91*
68 Highland Woodworking, *p. 34*
53 Hoffmann Machine Co., Inc., *p. 33*
Infinity Cutting Tools, *p. 97*
107 Inside Passage School of Fine Woodworking, *p. 34*
28 International Yacht Restoration School, *p. 103*
17 Iturra Design, *p. 34*
136 The Japan Woodworker,, *p. 97*
1 Jet, *p. 2*
135 Kay Industries, Inc., *p. 95*
18 Keller & Company, *p. 105*
52 Kreg Tool Company, *p. 33*
35 Kuffel Creek Press, *p. 29*

118 Laguna Tools, *p. 17*
119 Laguna Tools, *p. 89*
Lansky Sharpeners, *p. 18*
13 Leigh Industries, *p. 23*
115 Leigh Industries, *p. 25*
79 Lie-Nielsen Toolworks, *p. 25*
32 Lignomat Moisture Meters, *p. 34*
103 Lowell Thomas Tool Co., *p. 102*
56 Luthiers Mercantile Intl., *p. 103*
64 M.L. Condon Company, *p. 105*
83 MEG Products, *p. 103*
85 Manny's Woodworkers Place, *p. 20*
116 Mini Max USA, *p. 34*
Mortise Pal, *p. 97*
55 Noden Adjust-A-Bench, *p. 102*
34 Nora Hall, *p. 105*
27 Northwest School of Wooden Boatbuilding, *p. 105*
44 Northwest Timber, *p. 103*
6 Northwest Woodworking Studio, *p. 104*
16 Norton Stones, *p. 25*
101 Old English Academy of Fine Woodworking, *p. 102*
106 Oneida Air Systems, *p. 7*
111 Osborne Wood Products, *p. 33*
112 Osborne Wood Products, *p. 87*
113 Osborne Wood Products, *p. 91*
86 Peck Tool Company, *p. 105*
140 Phase-A-Matic, Inc., *p. 29*
67 Philadelphia Furniture Workshop, *p. 104*
75 Pine Creek Wood Co., *p. 104*
81 Pocahontas Woods, Inc., *p. 104*
23 Porter Cable, *p. 110-111*
2 Powermatic, *p. 95*
74 Pygmy Boats, Inc., *p. 103*
Quality Vakuum Products, *p. 18*
110 Rikon Power Tools, *p. 18*
89 Rockler Companies, Inc., *p. 19*

130 Rosewood Studio, *p. 9*
58 Router Bits.com, *p. 25*
120 S.R. Wood, *p. 105*
109 Sauers & Co. Processed Veneers, *p. 103*
19 SawStop, *p. 87*
133 Scherr's Cabinet & Doors, Inc., *p. 3*
94 School of Woodworking, *p. 95*
7 Screw Products, Inc., *p. 33*
129 Senco Products, Inc., *p. 15*
93 Shaker Workshops, *p. 33*
84 Sommerfeld's Tools for Wood, *p. 29*
The St. James Bay Tool Co., *p. 104*
59 Suffolk Machinery, *p. 105*
144 System Three Resins, *p. 97*
76 Talarico Hardwoods, *p. 104*
41 Timberwolf Tools, *p. 102*
50 Titebond Wood Glue, *p. 35*
62 Tools for Working Wood, *p. 33*
87 Traditional Woodworker, *p. 103*
114 Trend Routing Technology, *p. 91*
126 University of North Carolina Press, *p. 3*
49 Vac-U-Clamp, *p. 25*
80 Vacuum Pressing Systems, *p. 9*
Vermont Woodworking School, *p. 105*
Whitechapel, Ltd., *p. 29*
46 Williams & Hussey Machine Co., *p. 9*
100 Windsor Chair Workshops, *p. 105*
123 Wood Rat, *p. 3*
3 Wood River Veneer, *p. 102*
Woodcraft, *p. 23*
26 Woodcraft, *p. 87*
24 Woodcraft, *p. 101*
Woodfinder, *p. 102*
8 Woodmaster Tools, *p. 34*
134 Woodworkers Source, *p. 104*
139 Woodworker's Supply, *p. 95*

CLASSIFIED

The Classified rate is $9.50 per word, 15 word min. Orders must be accompanied by payment, ads are non-commissionable. The WOOD & TOOL EXCHANGE is for private use by individuals only; the rate is $15/line, minimum 3 lines. Send to: *Fine Woodworking* Classified Ad Dept., PO Box 5506, Newtown, CT 06470-5506. FAX 203-270-6310, Ph. (866) 505-4687. For more information on advertising go to www.finewoodworking.com/classified Deadline for the Jan./Feb. 2009 issue is October 31, 2008.

Business Opportunities

CALIFORNIA WALNUT SAWMILL Claro, English, Bastogne. For luxury furniture, guitars, gunstocks. Very profitable, two employees. Owner financed. (530) 846-1222.

Hand Tools

PETE NIEDERBERGER- Used and Antique tools and parts. A few just in- highly tuned Stanley planes. (415) 924-8403 or pniederber@aol.com Always buying!

BOB KAUNE-ANTIQUE & USED TOOLS. Since 1982. Hundreds of quality handtools. Stanley planes and parts. Visa/MC. www.antique-used-tools.com (360) 452-2292.

HIGHLANDWOODWORKING.COM, the world's largest selection of hand planes, plus thousands more fine hand tools.

Hardware

FURNITURE HARDWARE: drawer pulls, hinges, locks, casters, bed & table hardware. www.paxtonhardware.com 800-241-9741

Instruction

WINDSOR CHAIR CLASSES: 1 week intensive. Also turning classes. Lodging and meals included. Midwest. www.chairwright.com

RENAISSANCE APPRENTICESHIP PROGRAM: Design, carving, inlays. East Texas. (903) 769-1017. www.renaissancecustomfurniture.com/apprenticeships.html. One year. Free.

FURNITURE REFINISHING & TOUCH-UP and Spot Finish Repair. Establish a knowledge base of industrial methods and practices in one week, hands-on class. 888-222-9767. www.kwickkleen.com

COEUR D'ALENE SCHOOL OF WOODWORKING in beautiful north Idaho. Small, personalized classes. Flexible scheduling. Private instruction available. (208) 755-9902. www.cdawoodworkingschool.net

MINNEAPOLIS COMMUNITY & Technical College's Cabinetmaking program is accredited, flexible and focuses on furniture design/construction using the latest technology. (612) 659-6076 or www.minneapolis.edu.

1:1 TEACHER-TO-STUDENT RATIO at fine woodworking school. NEW instructional woodworking DVD now available. (519) 853-2027. www.passionforwood.com

THE ACANTHUS WORKSHOP, LLC - Traditional woodworking education with lead instructor, Charles Bender, using conventional hand tools and modern machinery. Call (610) 970-5862 or visit www.acanthus.com

PENLAND SCHOOL OF CRAFTS, in the spectacular North Carolina mountains, offers one-, two-, and eight-week workshops in woodworking and other media. (828) 765-2359; www.penland.org

ANDERSON RANCH ARTS CENTER on five historic acres near Aspen. Sam Maloof slept here. You can too. Summer workshops and winter residencies. See www.andersonranch.org/workshops or call (970) 923-3181 x 201 for a printed catalog.

COME TO LEARN IN SCOTLAND - The Chippendale International School of Furniture offers a 30-week intensive career program in Design, Making and Restoration. For further information phone: 011-44-1620-810680 or visit www.chippendale.co.uk

HANDS-ON COURSES in beautiful Maine. Beginner through advanced. Workshops, Twelve-week Intensive, Nine-month Comprehensive. Center for Furniture Craftsmanship (207) 594-5611, www.woodschool.org

BENJAMIN HOBBS Furniture Making Classes. Queen Anne and Chippendale chairs, chests, beds, tables, more. Hertford, NC. (252) 426-7815. www.hobbsfurniture.com

WOODTURNING INSTRUCTION: Russ Zimmerman's Punta Gorda, Florida workshop or yours. (941) 575-4337 or www.learntoturn.com

Machinery New / Used

WOOD CARVING DUPLICATOR. Make exact copies quickly. Ball & Claw Legs in 30 minutes. Radarcarve.net (505) 948-0571.

Miscellaneous / Accessories

COUNTERTOP GUYS READ THIS. I take post-formed laminate blanks to the site, miter, finish and install all in one trip. You can too! www.jiffytops.com (314) 440-1711.

WOODSLICER.COM, resawing blade rated best-performing 1/2-in. bandsaw blade by *Fine Woodworking*. 800-241-6748.

Plans & Kits

WWW.WOODCRAFTPLANS.COM 100's of plans. Visit online! $2 for large color catalog. 300 Warren, Dayton OH 45402

CARLYLE LYNCH MEASURED DRAWINGS—Museum and private collection furniture plans by Carlyle Lynch. www.carlylelynch.com

FULL SIZE FURNITURE LAYOUTS Drawn by: Philip C. Lowe. Catalog $3. (978) 922-0615. 116 Water Street, Beverly, MA 01915. www.furnituremakingclasses.com

Power Tools

CADEX & NIKLE pin nailers & pins, Flexeel air hose & fittings at www.floydtool.com

LAMELLO BISCUIT JOINERS and Accessories/Parts/Repairs. Best prices, most knowledgeable. Call us for all your woodworking & solid surfacing needs. 800-789-2323. Select Machinery, Inc. www.selectmachineryinc.com

Shows and Events

RAPHAEL PRIZE WORKS IN WOOD; $5,000 prize; jurors: Craig Nutt, Michael Monroe; deadline 1/26/09. Society for Contemporary Craft, Pittsburgh, PA. Entry form: www.contemporarycraft.org or administration@contemporarycraft.org.

Wood

CLEAR ALASKAN YELLOW CEDAR vertical grain. Clear vertical Douglas fir. www.EasyCreekLumber.com (541) 344-3275 or (541) 521-5107 e-mail; keith@easycreeklumber.com

WWW.BIRDSEYEMAPLE.COM 1-877-355-8957

TIGER MAPLE, MAHOGANY, cherry, walnut, butternut, curly birch; plain and figured. Wide boards, matched sets, 4/4 to 24/4. 150-ft. minimum. (570) 724-1895. www.irionlumber.com

FIGURED CLARO WALNUT slabs and planks, in dimensions suitable for small to very large projects. CWD: 800-660-0203. www.woodnut.com

LONGLEAF HEART PINE (antique). Flooring-lumber-millwork. Red cedar lumber & paneling. Lee Yelton: (706) 541-1039.

CAPEHARDWOODS.COM Teak, maple, oak, birch, sapele, cherry, plywoods & more. (508) 548-0017. West Falmouth, MA.

NORTH/CENTRAL VIRGINIA. Tiger maple, red cherry, quartersawn oak and sycamore, others. Matched sets, whole logs. Visit our new warehouse in Elkwood, VA off US 15/29. C.P. Johnson Lumber. (540) 825-1006, (540) 937-3054.

QUILTED, CURLY, SPALTED & burled maple, marbled, curly & crotch claro walnut, figured myrtlewood, Huge inventory of lumber, billets & blocks. 10,000 items photographed and priced. Visit our online store at www.nwtimber.net or call (800) 238-8036.

CLARO WALNUT SLABS 24 to 60-inches wide; 4 to 20 ft. long. (408) 847-8433. Gilroy, CA. www.bakerhardwoods.com

APPALACHIAN HARDWOODS direct from sawmill. Quartersawn, flitches, crotch lumber. Herbine Hardwoods, Leesburg, VA. (703) 771-3067. www.herbinehardwood.com

EISENBRAND EXOTIC Hardwoods. Over 100 species. Highest quality. Volume discounts. Brochure. 800-258-2587; Fax 310-542-2857, eisenbran.com

SAWMILL DIRECT 100 species of exotics, turning, lumber, logs, slabs, musical instruments TROPICAL EXOTIC HARDWOODS OF LATIN AMERICA, LLC: Toll Free (888) 434-3031. www.anexotichardwood.com

LARGE CLARO WALNUT book-matched slabs, turning stock, raw and paper-backed veneer of burl and crotches. www.walnutwoods.net online store. Newton Woods. (559) 277-8456. Fresno, CA.

MESQUITE LUMBER (915) 479-3988.

COLLECTOR'S SPECIALTY WOODS "Rocky Mountain Dry" lumber, tops, burl slabs, flooring, blocks, bases-showroom/mill room/wood yard; www.cswoods.com (719) 746-2413. (CO)

BIRD'S-EYE AND CURLY MAPLE, 4/4 to 12/4 lumber, flitches, turning squares and blocks. Black walnut, cherry/quartersawn, and curly oak lumber. Dunlap Woodcrafts, Chantilly, VA. (703) 631-5147.

QUALITY NORTHERN APPALACHIAN hardwood. Custom milling. Free delivery. Bundled, surfaced. Satisfaction guarantee. Niagara Lumber. 800-274-0397. www.niagaralumber.com

DOMESTIC AND IMPORTED EXOTICS. For musical instruments, pool cues, knife handles and custom furniture. Price list. Exotic Woods, 1-800-443-9264. www.exoticwoods.com

NORTHWEST'S FINEST BURL, maple, myrtle, redwood, buckeye. Table, clock slabs, turning blocks. (503) 394-3077. burlwoodonline.com

WOOD AND TOOL EXCHANGE

Limited to use by individuals only.

For Sale

Fine Woodworking issues #1-199 (missing 3 issues). $400 plus shipping. (352) 365-2586; bgrugg@embarqmail.com

DIMENSION LUMBER: Black Cherry; 16/4, FAS, KD, 9 pieces 7-in. to 14-in.W by 7-ft. to 12-ft. L, 265-bd/ft. Black Walnut; 16/4 FAS, KD, 1 pc. 16-in. W by 6-ft. L. Honduran Mahogany; 1 1/8-in. Clear, KD, 7 pieces 22-in. to 27-in. W by 10-in. to 14-in. L, 160-bd/ft. (304) 296-8198. (WV)

Fine Woodworking issues #38-#194 (except 126). Excel. cond. $300 + S&H. Call (325) 949-3837 or email paulbetty@suddenlink.net

Man or machine?

BY ANISSA KAPSALES

Upon first seeing Duncan Gowdy's carved work (back cover) it would be easy to assume the fine lines, consistent depths, and repetitive shapes were made with a CNC machine. But a closer look reveals the subtle facets, tool marks, variation, and character that can only be the product of a skilled hand. Gowdy's adept carving and an interesting medley of finishes combine to yield these unique pieces.

Sea-foam imprint. *The tidal carving on the ash sideboard (pictured on the back cover) depicts the pattern left by a receding wave.*

Layout

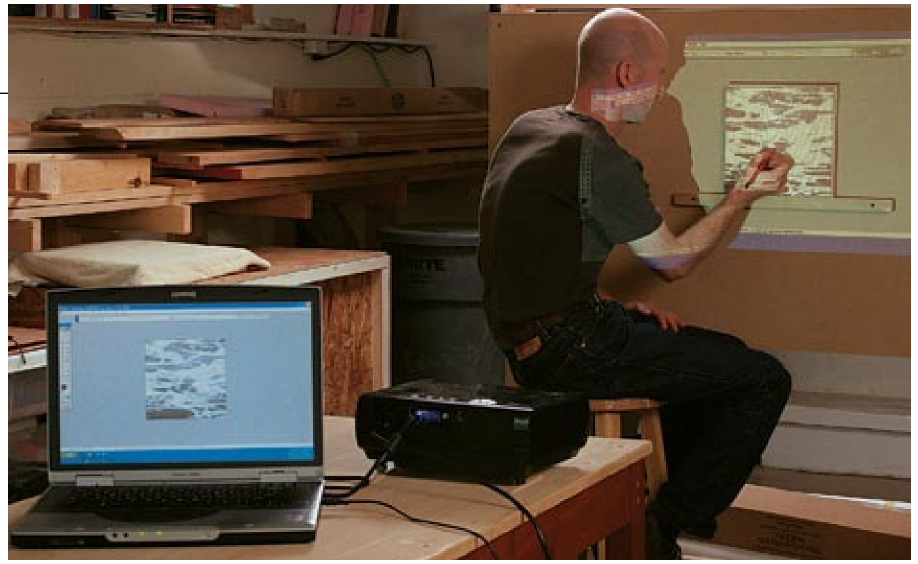

Transfer the image. *The patterns are derived from photographs that Gowdy shoots. He uses a computer and projector to cast the image onto the workpiece, and then pencils in the lines.*

Carving

Rough-carve and then refine. *If the area is large enough, Gowdy uses an angle grinder with a 2-in. coarse, carbide wheel (right). Once the rough carving is complete, Gowdy moves to a more controlled carving with gouges (far right), keeping his tools sharp so the tool marks are subtle.*

Sources of Supply

2-IN. TUNGSTEN COARSE CARBIDE DISK
www.woodcraft.com

KLEAN-STRIP WOOD BLEACH, JAPAN COLORS, WIPE-ON GEL STAIN, BEHLEN WHITE PICKLING STAIN
www.woodworker.com

CLEARTHANE
www.olddads.com

Finishing

Bleach everything, then bring it back to life. *The first step is to bleach the whole surface with three to five applications of Klean-Strip (a two-part bleach). Then the bleach is neutralized with a wash of two parts water and one part white vinegar. After drying the wood for at least a day, two applications of Behlen white pickling stain are brushed on (1) and wiped off. Gowdy tints the stain with a tiny amount of two Japan colors, Raw Umber and French Yellow Ochre, just to knock off the brightness. Then he carefully applies two coats of black wipe-on gel stain to the uncarved, flat areas (2), wiping off the excess (3) and letting it dry overnight between coats. Finally, he wipes on three coats of satin Clearthane polyurethane (4).*

Reversing the process

To create the stark silhouette of the tree branches on the wall cabinet (shown on the back cover), Gowdy colored the recessed areas instead of the flats.

Gouges do the grunt work. *Because the carved areas in this design are too narrow for a grinder, Gowdy removes all of the material with hand gouges (above). After he bleaches the wood and applies two coats of the tinted white pickling stain, Gowdy again brushes on gel stain, but this time in the carved areas rather than on the flats (center). He works on small sections, brushing on the gel stain and wiping it off as he goes (bottom). He then applies Clearthane over everything, again working in sections.*

Photos: Anissa Kapsales

THRIVES UNDER PRESSURE. BECAUSE IT WAS ENGINEERED FOR IT.

Introducing our new Low Profile Random Orbit Sander with EnduraTech™ Motor Technology. The revolutionary, brushless EnduraTech™ motor design is so compact it allowed us to trim the height of this sander by 31% – giving you greater control. The new motor also features Electronic Load Control. This allows the sander to constantly monitor and maintain speed – resulting in 42% faster material removal. Better performance. Better control. All so you can finish faster. Check out deltaportercable.com/lpsander for complete Low Profile Sander details and specifications.

Electronic motor brake for 73% faster pad spin-down

Long-lasting, 3.5 Amp, EnduraTech™ Motor Technology

31% lower profile for better control and finish

PORTER CABLE

The Measure of Precision™

READER SERVICE NO. 23

Carved in His Memory

Duncan Gowdy was studying illustration at Southeastern Massachusetts College in 1991 when he took an elective that exposed him to woodworking. The teacher, Michael Pierschalla, recognized his aptitude with tools and encouraged him to pursue it. By the end of the year, Gowdy had switched majors, to furniture design. To improve his woodworking technique, he followed his inspiring teacher to the Penland School of Crafts in North Carolina for an intensive two-month workshop.

A decade later, Gowdy was building timber-frame houses by day and making furniture by night in his small Massachusetts shop, developing the distinctive style seen in these recent pieces. It's a style that merges his flair for illustration with his skills as a furniture maker and carver.

Gowdy generates his carving designs from photographs of nature. He projects a photo onto the surface to be carved and traces the outlines in pencil, and then uses gouges to do the carving. Most of the photos he uses express his affection for New England. But the sideboard carving above, of sea foam left by a receding wave, is from La Jolla, Calif. Gowdy took the photo on a beach where he had helped spread the ashes of his mentor.

—Jonathan Binzen

Photos: Dean Powell

How They Did It Turn to p. 108 to see how Gowdy designs, carves, and finishes his pieces.

Pro Portfolio Go to FineWoodworking.com to see more pieces by Gowdy and to hear more about his work.